PE2591

Pressure sensor with display

PE-250-SEG14-MFRKG/US/ /E

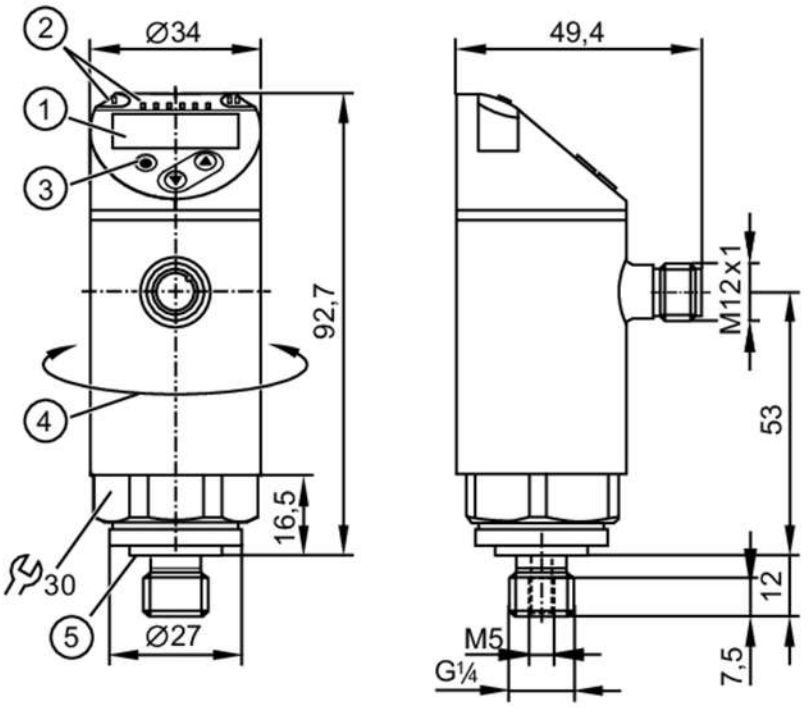

1 alphanumeric display 4-digit red/green
2 LEDs Display unit / switching status
3 programming button
4 upper part of the housing can be rotated 345°
5 Sealing

Product characteristics			
Number of inputs and outputs	Number of digital outputs: 2; Number of analogue outputs: 1		
Measuring range	0...250 bar	0...3625 psi	0...25 MPa
Process connection	threaded connection G 1/4 external thread internal thread:M5; DIN EN ISO 1179-2		
Application			
Special feature	Gold-plated contacts		
Measuring element	ceramic-capacitive pressure measuring cell		
Application	for industrial applications		
Media	liquids and gases		
Conditionally suitable for	use in gases at pressures > 25 bar only on request		
Medium temperature [°C]	-25...80		
Min. bursting pressure	1000 bar	14500 psi	100 MPa
Pressure rating	500 bar	7250 psi	50 MPa
Vacuum resistance	-1000 mbar	-0.1 MPa	
Type of pressure	relative pressure		
Electrical data			
Operating voltage [V]	18...30 DC; (to SELV/PELV)		
Current consumption [mA]	< 35		
Min. insulation resistance [MΩ]	100; (500 V DC)		
Protection class	III		

PE2591

Pressure sensor with display

PE-250-SEG14-MFRKG/US/ /E

Reverse polarity protection		yes		
Power-on delay time	[s]	0.3		
Integrated watchdog		yes		
Inputs / outputs				
Number of inputs and outputs		Number of digital outputs: 2; Number of analogue outputs: 1		
Outputs				
Total number of outputs		2		
Output signal		switching signal; analogue signal; IO-Link; (configurable)		
Electrical design		PNP/NPN		
Number of digital outputs		2		
Output function		normally open / normally closed; (parameterisable)		
Max. voltage drop switching output DC	[V]	2		
Permanent current rating of switching output DC	[mA]	250		
Switching frequency DC	[Hz]	< 500		
Number of analogue outputs		1		
Analogue current output	[mA]	4...20; (scalable 1:5)		
Max. load	[Ω]	500		
Analogue voltage output	[V]	0...10; (scalable 1:5)		
Min. load resistance	[Ω]	2000		
Short-circuit protection		yes		
Type of short-circuit protection		pulsed		
Overload protection		yes		
Measuring/setting range				
Measuring range		0...250 bar	0...3625 psi	0...25 MPa
Set point SP		1.5...250 bar	25...3625 psi	0.15...25 MPa
Reset point rP		0.5...249 bar	10...3610 psi	0.05...24.9 MPa
Analogue start point		0...200 bar	0...2900 psi	0...20 MPa
Analogue end point		50...250 bar	725...3625 psi	5...25 MPa
In steps of		0.5 bar	5 psi	0.05 MPa
Accuracy / deviations				
Switch point accuracy	[% of the span]	< ± 0,4; (Turn down 1:1)		
Repeatability	[% of the span]	< ± 0,1; (with temperature fluctuations < 10 K; Turn down 1:1)		
Characteristics deviation	[% of the span]	< ± 0,25 (BFSL) / < ± 0,5 (LS); (Turn down 1:1; BFSL = Best Fit Straight Line; LS = limit value setting)		
Hysteresis deviation	[% of the span]	< ± 0,1; (Turn down 1:1)		
Long-term stability	[% of the span]	< ± 0,05; (Turn down 1:1; per 6 months)		
Temperature coefficient zero point	[% of the span / 10 K]	0,2; (-25...80 °C)		
Temperature coefficient span		0,2; (-25...80 °C)		

PE2591

Pressure sensor with display

PE-250-SEG14-MFRKG/US/ /E

[% of the span / 10 K]			
Notes on the accuracy / deviation		switch point accuracy, linearity error under DNV GL: < ± 1%: < ± 1%	
Response times			
Response time	[ms]	< 1.5	
Delay time programmable dS, dr	[s]	0...50	
Damping process value dAP	[s]	0...4	
Damping for the analogue output dAA	[s]	0...4	
Max. response time analogue output	[ms]	3	
Software / programming			
Parameter setting options		hysteresis / window; normally open / normally closed; switch-on/ switch-off delay; Damping; Display unit; current/voltage output	
Interfaces			
Communication interface		IO-Link	
Transmission type		COM2 (38,4 kBaud)	
IO-Link revision		1.1	
SDCI standard		IEC 61131-9	
Profiles		Smart Sensor: Process Data Variable; Device Identification, Device Diagnosis	
SIO mode		yes	
Required master port type		A	
Process data analogue		1	
Process data binary		2	
Min. process cycle time	[ms]	2.3	
Supported DeviceIDs		**Type of operation**	**DeviceID**
		default	460
Operating conditions			
Ambient temperature	[°C]	-25...80	
Storage temperature	[°C]	-40...100	
Protection		IP 65; IP 67	
Tests / approvals			
EMC		DIN EN 61000-6-2	
		DIN EN 61000-6-3	
Shock resistance		DIN EN 60068-2-27	50 g (11 ms)
Vibration resistance		DIN EN 60068-2-6	20 g (10...2000 Hz)
MTTF	[years]	161	
Pressure Equipment Directive		Sound engineering practice; can be used for group 2 fluids; group 1 fluids on request	
Mechanical data			
Weight	[g]	344.5	
Housing		cylindrical	
Dimensions	[mm]	Ø 34 / L = 92.7	
Materials		stainless steel (316L/1.4404); PBT+PC-GF30; PBT-GF20; PC; EPDM	
Materials (wetted parts)		stainless steel (316L/1.4404); EPDM	
Min. pressure cycles		100 million	

PE2591

Pressure sensor with display

PE-250-SEG14-MFRKG/US/ /E

Tightening torque	[Nm]	25...35; (recommended tightening torque; depends on lubrication, seal and pressure rating)
Process connection		threaded connection G 1/4 external thread internal thread:M5; DIN EN ISO 1179-2
Process connection sealing		EPDM
Restrictor element integrated		no (can be retrofitted)

Displays / operating elements

Display	Display unit	3 x LED, green (bar, psi, MPa)
	switching status	2 x LED, yellow
	measured values	alphanumeric display, red/green 4-digit

Remarks

Pack quantity	1 pcs.

Electrical connection

Connector: 1 x M12; coding: A; Contacts: gold-plated



Connection

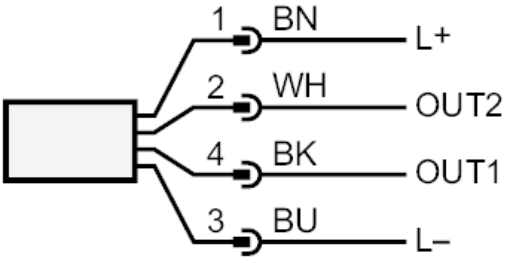

OUT1	switching output or IO-Link
OUT2	switching output or analogue output
	colours to DIN EN 60947-5-2
	Core colours :
BK =	black
BN =	brown
BU =	blue
WH =	white