NU 311 ECJ

Popular item
SKF Explorer

Dimensions

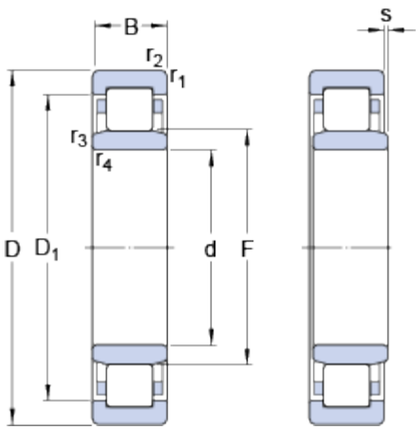

d		55	mm
D		120	mm
B		29	mm
D_1	≈	100.3	mm
F		70.5	mm
$r_{1,2}$	min.	2	mm
$r_{3,4}$	min.	2	mm
s	max.	2	mm

Abutment dimensions

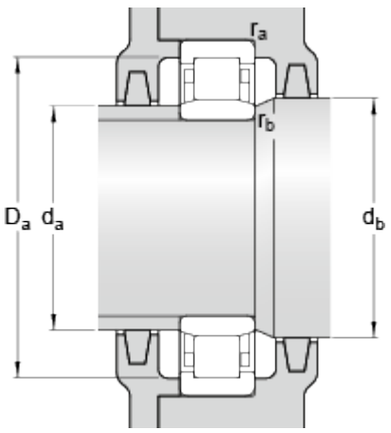

d_a	min.	65	mm
d_a	max.	68	mm
d_b	min.	73	mm
D_a	max.	109.2	mm
r_a	max.	2	mm
r_b	max.	2	mm

Calculation data

Basic dynamic load rating	C	156	kN
Basic static load rating	C_0	143	kN
Fatigue load limit	P_u	18.6	kN
Reference speed		6000	r/min
Limiting speed		7000	r/min
Calculation factor	k_r	0.15	
Limiting value	e	0.2	
Axial load factor	Y	0.6	

Mass

Mass bearing	1.48	kg

Associated products

Angle ring	HJ 311 EC