Product datasheet

Specifications



inductive sensor XS9 M18 - L64mm - full SS 303 - Sn10 mm - 12..24VDC - M12

XS918R1PAM12

Main

Range of product	Telemecanique Inductive proximity sensors XS
Series name	Application
Sensor type	Inductive proximity sensor
Device application	Harsh environment application
Sensor name	XS9
Sensor design	Cylindrical M18
Size	64 mm
Body type	Single piece body
Enclosure material	Stainless steel 303
Type of output signal	Discrete
Wiring technique	3-wire
[Sn] nominal sensing distance	10 mm
Discrete output function	1 NO
Discrete output type	PNP
Electrical connection	Male connector M12, 4 pins
[Us] rated supply voltage	12...24 V DC with reverse polarity protection
Switching capacity in mA	<= 200 mA with overload and short-circuit protection
IP degree of protection	IP69K conforming to DIN 40050 IP68 conforming to IEC 60529

Complementary

Thread type	M18 x 1
Detection face	Frontal
Detector flush mounting acceptance	Flush mountable
Material	Stainless steel 303
Front material	Stainless steel 303
Sensing range	> 8...15 mm
Operating zone	0…8 mm
Differential travel	1...15 % of Sr

Disclaimer: This documentation is not intended as a substitute for and is not to be used for determining suitability or reliability of these products for specific user applications

Repeat accuracy	<= 5 % of Sr
Output circuit type	DC
Status LED	Output state: 1 LED (yellow)
Supply voltage limits	10…30 V DC
Maximum residual current	0.1 mA open state
Switching frequency	<= 300 Hz
Maximum voltage drop	<2 V (closed)
Current consumption	<= 10 mA no-load
Maximum delay first up	40 ms
Maximum delay response	0.00006 ms
Maximum delay recovery	0.015 ms
Marking	CE
Threaded length	42 mm
Height	18 mm
Length	64 mm
Net weight	0.051 kg

Environment

Product certifications	cULus
Ambient air temperature for operation	-25…70 °C
Ambient air temperature for storage	-25…70 °C
Vibration resistance	25 gn amplitude = +/- 1 mm (f = 10…55 Hz) conforming to IEC 60068-2-6
Shock resistance	30 gn for 11 ms conforming to IEC 60068-2-27

Packing Units

Unit Type of Package 1	PCE
Number of Units in Package 1	1
Package 1 Weight	62.0 g
Package 1 Height	2 cm
Package 1 width	8 cm
Package 1 Length	13 cm
Unit Type of Package 2	S01
Number of Units in Package 2	25
Package 2 Weight	1.756 kg
Package 2 Height	15 cm
Package 2 width	15 cm
Package 2 Length	40 cm

Offer Sustainability

REACh Regulation	REACh Declaration
EU RoHS Directive	Pro-active compliance (Product out of EU RoHS legal scope) EU RoHS Declaration
Mercury free	Yes

RoHS exemption information	Yes

Contractual warranty

Warranty	18 months

Product datasheet XS918R1PAM12

Dimensions Drawings

Dimensions

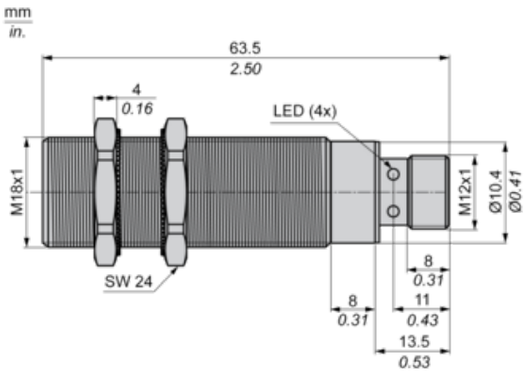

Minimum Mounting Distances

Side by side

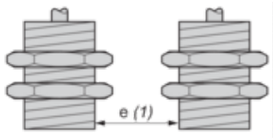

e (1) ≥ 42 mm/1.65 in.

Face to face

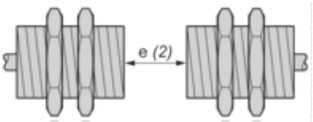

e (2) ≥ 40 mm/1.57 in.

Facing a metal object

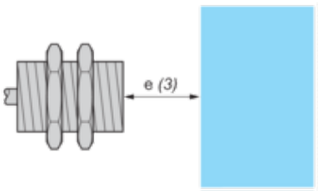

e (3) ≥ 30 mm/1.18 in

Mounted in a metal support

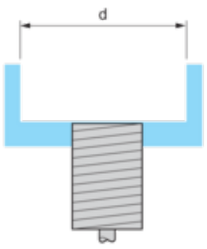

d ≥ 50 mm/1.97 in

Wiring Schemes

M12 connector



PNP

