IFS340

Inductive sensor

IFB4006QCPKG/US-104

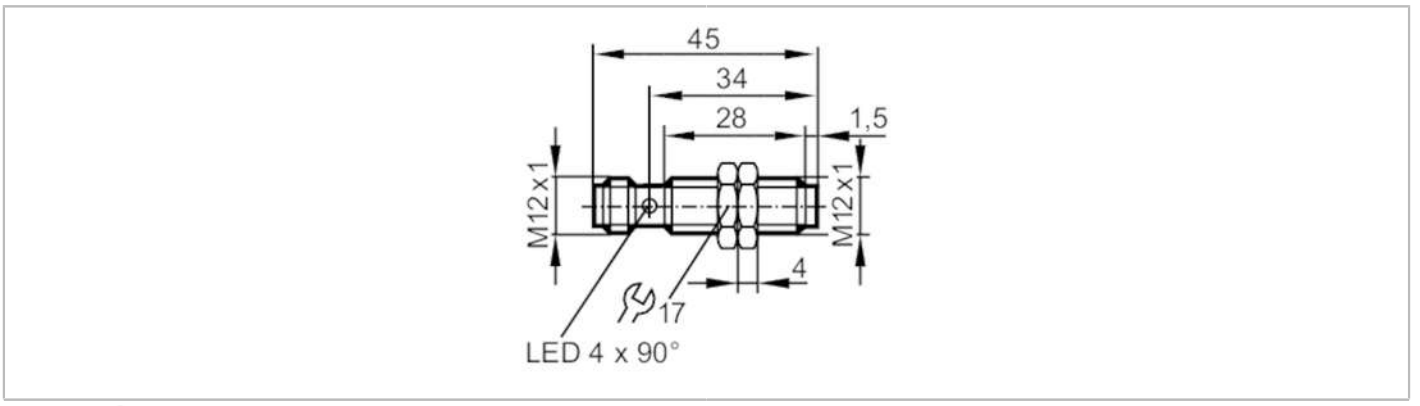

Product characteristics		
Electrical design		PNP
Output function		complementary
Sensing range	[mm]	6
Housing		threaded type
Dimensions	[mm]	M12 x 1 / L = 45
Application		
Special feature		Gold-plated contacts; Increased sensing range
Application		Suitable for industrial, mobile, cooling and lubricating applications; Industrial applications / factory automation
Electrical data		
Operating voltage	[V]	10...30 DC
Current consumption	[mA]	< 10
Protection class		III
Reverse polarity protection		yes
Outputs		
Electrical design		PNP
Output function		complementary
Max. voltage drop switching output DC	[V]	2.5
Permanent current rating of switching output DC	[mA]	100
Switching frequency DC	[Hz]	500
Short-circuit protection		yes
Overload protection		yes
Detection zone		
Sensing range	[mm]	6
Real sensing range Sr	[mm]	6 ± 10 %
Operating distance	[mm]	0...4.86
Increased sensing range		yes
Accuracy / deviations		
Correction factor		steel: 1 / stainless steel: 0.7 / brass: 0.4 / aluminium: 0.4 / copper: 0.3

IFS340

Inductive sensor

IFB4006QCPKG/US-104

Hysteresis	[% of Sr]	1...15	
Switch point drift	[% of Sr]	-10...10	
Operating conditions			
Ambient temperature	[°C]	-40...85	
Protection		IP 65; IP 66; IP 67; IP 68; IP 69K	
Tests / approvals			
EMC		EN 61000-4-2 ESD	4 kV CD / 8 kV AD
		EN 61000-4-3 HF radiated	10 V/m
		EN 61000-4-4 Burst	2 kV
		EN 61000-4-6 HF conducted	10 V
Vibration resistance		EN 60068-2-6 Fc	20 g (10...3000 Hz) / 50 sweep cycles, 1 octave per minute, in 3 axes
Shock resistance		EN 60068-2-27 Ea	100 g 11 ms half-sine; 3 shocks each in every direction of the 3 coordinate axes
Continuous shock resistance		EN 60068-2-27	40 g 6 ms; 4000 shocks each in every direction of the 3 coordinate axes
Fast temperature change		EN 60068-2-14 Nc	TA = -40 °C; TB = 85 °C; t1 = 30 min; t2 = < 10 s; 50 cycles
MTTF	[years]	364	
Embedded software included		no	
UL approval		UL Approval no.	A037
Mechanical data			
Weight	[g]	24.6	
Housing		threaded type	
Mounting		quasi flush	
Dimensions	[mm]	M12 x 1 / L = 45	
Thread designation		M12 x 1	
Materials		brass white bronze coated; sensing face: PBT orange; LED window: PEI; lock nuts: brass white bronze coated	
Tightening torque	[Nm]	7	
Displays / operating elements			
Display		switching status	4 x LED, yellow
Accessories			
Items supplied		lock nuts: 2	
Remarks			
Pack quantity		1 pcs.	

Electrical connection - plug

Connector: 1 x M12; coding: A; Contacts: gold-plated



IFS340

Inductive sensor

IFB4006QCPKG/US-104

Connection

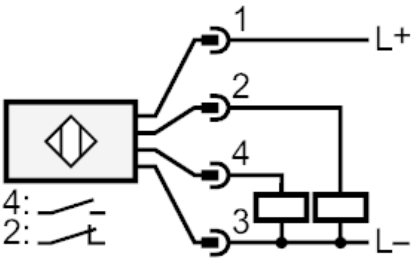

Diagrams and graphs

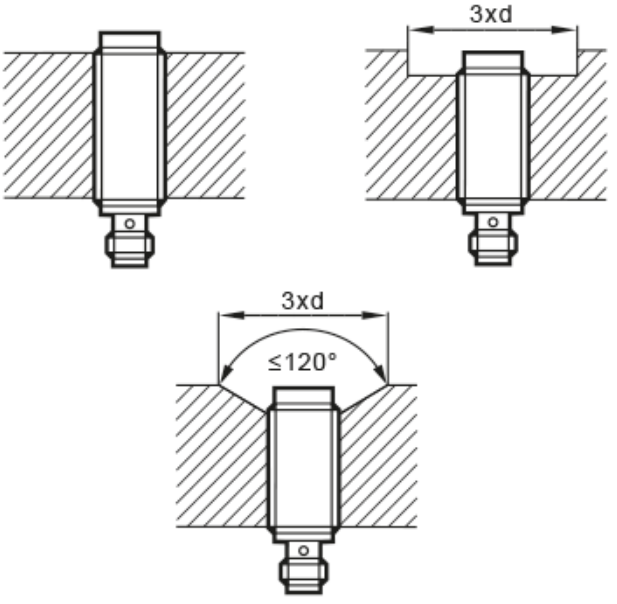

Installation