# DATASHEET - ZE-0,16



**Overload relay, Ir= 0.1 - 0.16 A, 1 N/O, 1 N/C, Direct mounting**

| | |
|---|---|
| **Part no.** | **ZE-0,16** |
| **Catalog No.** | **014263** |
| **Alternate Catalog No.** | **XTOMP16AC1** |
| **EL-Nummer (Norway)** | **4130474** |

## Delivery program

| | | | |
|---|---|---|---|
| Product range | | | ZE overload relays for mini contactor relays |
| Phase-failure sensitivity | | | IEC/EN 60947, VDE 0660 Part 102 |
| Description | | | Test/off button<br>Reset pushbutton manual/auto<br>Trip-free release |
| Mounting type | | | Direct mounting |
| **Setting range** | | | |
| Overload releases | $I_r$ | A | 0.1 - 0.16 |
| Contact sequence | | | 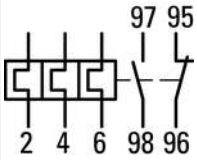 |
| **Auxiliary contacts** | | | |
| N/O = Normally open | | | 1 N/O |
| N/C = Normally closed | | | 1 N/C |
| For use with | | | DILEM<br>DIULEM/21/MV |
| **Short-circuit protection** | | | |
| Type “1” coordination | gG/gL | A | 20 |
| Type “2” coordination | gG/gL | A | 0.5 |



**Notes**

Overload trigger: tripping class 10 A

Short circuit protection: observe the maximum permissible fuse of the contactor with direct device mounting.

Suitable for protection of Ex e-motors

II(2)G [Ex d] [Ex e] [Ex px]
II(2)D [Ex p] [Ex t]

PTB 10 ATEX 3014

Observe manual MN03407003Z-DE/EN.

**Notes**
When fitted directly to the contactor a clearance of at least 5 mm is required between the overload relays.

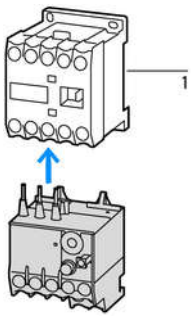


1 Contactor

# Technical data

## General

| | | | |
|---|---|---|---|
| Standards | | | IEC/EN 60947, VDE 0660, UL, CSA |
| Climatic proofing | | | Damp heat, constant, to IEC 60068-2-78<br>Damp heat, cyclic, to IEC 60068-2-30 |
| Ambient temperature | | | |
| | | | Operating range to IEC/EN 60947<br>PTB: -5 °C - +55 °C |
| Open | | °C | -25 - +50 |
| Enclosed | | °C | - 25 - 40 |
| Temperature compensation | | | Continuous |
| Weight | | kg | 0.073 |
| Mechanical shock resistance | | g | 10<br>Sinusoidal<br>Shock duration 10 ms |
| Degree of Protection | | | IP20 |
| Protection against direct contact when actuated from front (EN 50274) | | | Finger and back-of-hand proof |
| Altitude | | m | Max. 2000 |

## Main conducting paths

| | | | |
|---|---|---|---|
| Rated impulse withstand voltage | $U_{imp}$ | V AC | 6000 |
| Overvoltage category/pollution degree | | | III/3 |
| Rated insulation voltage | $U_i$ | V | 690 |
| Rated operational voltage | $U_e$ | V AC | 690 |
| Safe isolation to EN 61140 | | | |
| Between auxiliary contacts and main contacts | | V AC | 300 |
| Between main circuits | | V AC | 300 |
| Temperatur compensation residual error > 40 °C | | | ≦ 0.25 %/K |
| Current heat loss (3 conductors) | | | |
| Lower value of the setting range | | W | 2.5 |
| Maximum setting | | W | 4.8 |
| Terminal capacities | | $mm^2$ | |
| Solid | | $mm^2$ | 1 x (0.75 - 2.5) |
| Flexible with ferrule | | $mm^2$ | 1 x (0.5 - 1.5) |
| Solid or stranded | | AWG | 18 - 14 |
| Terminal screw | | | M3.5 |
| Tightening torque | | Nm | 1.2 |
| Stripping length | | mm | 8 |
| Tools | | | |
| Pozidriv screwdriver | | Size | 2 |
| Standard screwdriver | | mm | 0.8 x 5.5 |

## Auxiliary and control circuits

| | | | |
|---|---|---|---|
| Rated impulse withstand voltage | $U_{imp}$ | V | 4000 |
| Overvoltage category/pollution degree | | | III/3 |
| Terminal capacities | | $mm^2$ | |
| Solid | | $mm^2$ | 1 x (0.75 - 2.5)<br>2 x (0.75 - 2.5) |
| Flexible with ferrule | | $mm^2$ | 1 x (0.5 - 1.5) |

| | | | |
|---|---|---|---|
| | | | 2 x (0.5 - 1.5) |
| Solid or stranded | | AWG | 2 x (18 - 12) |
| Terminal screw | | | M3.5 |
| Tightening torque | | Nm | 1.2 |
| Stripping length | | mm | 8 |
| Tools | | | |
| Pozidriv screwdriver | | Size | 2 |
| Standard screwdriver | | mm | 0.8 x 5.5 |
| Rated insulation voltage | $U_i$ | V AC | 500 |
| Rated operational voltage | $U_e$ | V AC | 500 |
| Safe isolation to EN 61140 | | | |
| between the auxiliary contacts | | V AC | 250 |
| Conventional thermal current | $I_{th}$ | A | 6 |
| Rated operational current | $I_e$ | A | |
| AC-15 | | | |
| Make contact | | | |
| 120 V | $I_e$ | A | 1.5 |
| 220 V 230 V 240 V | $I_e$ | A | 1.5 |
| 380 V 400 V 415 V | $I_e$ | A | 0.7 |
| 500 V | $I_e$ | A | 0.5 |
| Break contact | | | |
| 120 V | $I_e$ | A | 1.5 |
| 220 V 230 V 240 V | $I_e$ | A | 1.5 |
| 380 V 400 V 415 V | $I_e$ | A | 0.7 |
| 500 V | $I_e$ | A | 0.5 |
| DC L/R ≦ 15 ms | | | |
| | | | Switch-on and switch-off conditions based on DC-13, time constant as specified. |
| 24 V | $I_e$ | A | 0.9 |
| 60 V | $I_e$ | A | 0.75 |
| 110 V | $I_e$ | A | 0.4 |
| 220 V | $I_e$ | A | 0.2 |
| Short-circuit rating without welding | | | |
| max. fuse | | A gG/gL | 4 |

## Notes

**Notes** Ambient air temperature: Operating range to IEC/EN 60947, PTB: -5°C to +50°C
Main circuits terminal capacity solid and flexible conductors with ferrules: When using 2 conductors use equal cross-sections.

## Rating data for approved types

| | | | |
|---|---|---|---|
| Auxiliary contacts | | | |
| Pilot Duty | | | |
| AC operated | | | D300 |
| DC operated | | | R300 |
| General Use | | | |
| AC | | V | 240 V/1,5 A<br>600 V/0,6 A |
| Short Circuit Current Rating | | SCCR | |
| Basic Rating | | | |
| Notes | | | CB for max. 480 V |
| SCCR | | kA | 5 |
| max. Fuse | | A | 1 |
| max. CB | | A | 15 |

# Design verification as per IEC/EN 61439

| | | | |
|---|---|---|---|
| Technical data for design verification | | | |
| Rated operational current for specified heat dissipation | $I_n$ | A | 0.16 |
| Heat dissipation per pole, current-dependent | $P_{vid}$ | W | 1.6 |

| | | | |
|---|---|---|---|
| Equipment heat dissipation, current-dependent | $P_{vid}$ | W | 4.8 |
| Static heat dissipation, non-current-dependent | $P_{vs}$ | W | 0 |
| Heat dissipation capacity | $P_{diss}$ | W | 0 |
| Operating ambient temperature min. | | °C | -25 |
| Operating ambient temperature max. | | °C | 50 |
| IEC/EN 61439 design verification | | | |
| 10.2 Strength of materials and parts | | | |
| 10.2.2 Corrosion resistance | | | Meets the product standard's requirements. |
| 10.2.3.1 Verification of thermal stability of enclosures | | | Meets the product standard's requirements. |
| 10.2.3.2 Verification of resistance of insulating materials to normal heat | | | Meets the product standard's requirements. |
| 10.2.3.3 Verification of resistance of insulating materials to abnormal heat and fire due to internal electric effects | | | Meets the product standard's requirements. |
| 10.2.4 Resistance to ultra-violet (UV) radiation | | | Meets the product standard's requirements. |
| 10.2.5 Lifting | | | Does not apply, since the entire switchgear needs to be evaluated. |
| 10.2.6 Mechanical impact | | | Does not apply, since the entire switchgear needs to be evaluated. |
| 10.2.7 Inscriptions | | | Meets the product standard's requirements. |
| 10.3 Degree of protection of ASSEMBLIES | | | Does not apply, since the entire switchgear needs to be evaluated. |
| 10.4 Clearances and creepage distances | | | Meets the product standard's requirements. |
| 10.5 Protection against electric shock | | | Does not apply, since the entire switchgear needs to be evaluated. |
| 10.6 Incorporation of switching devices and components | | | Does not apply, since the entire switchgear needs to be evaluated. |
| 10.7 Internal electrical circuits and connections | | | Is the panel builder's responsibility. |
| 10.8 Connections for external conductors | | | Is the panel builder's responsibility. |
| 10.9 Insulation properties | | | |
| 10.9.2 Power-frequency electric strength | | | Is the panel builder's responsibility. |
| 10.9.3 Impulse withstand voltage | | | Is the panel builder's responsibility. |
| 10.9.4 Testing of enclosures made of insulating material | | | Is the panel builder's responsibility. |
| 10.10 Temperature rise | | | The panel builder is responsible for the temperature rise calculation. Eaton will provide heat dissipation data for the devices. |
| 10.11 Short-circuit rating | | | Is the panel builder's responsibility. The specifications for the switchgear must be observed. |
| 10.12 Electromagnetic compatibility | | | Is the panel builder's responsibility. The specifications for the switchgear must be observed. |
| 10.13 Mechanical function | | | The device meets the requirements, provided the information in the instruction leaflet (IL) is observed. |

## Technical data ETIM 8.0

| | | | |
|---|---|---|---|
| Low-voltage industrial components (EG000017) / Thermal overload relay (EC000106) | | | |
| Electric engineering, automation, process control engineering / Low-voltage switch technology / Overload protection device / Thermal overload relay (ecl@ss10.0.1-27-37-15-01 [AKF075014]) | | | |
| Adjustable current range | | A | 0.1 - 0.16 |
| Max. rated operation voltage Ue | | V | 690 |
| Mounting method | | | Direct attachment |
| Type of electrical connection of main circuit | | | Screw connection |
| Number of auxiliary contacts as normally closed contact | | | 1 |
| Number of auxiliary contacts as normally open contact | | | 1 |
| Number of auxiliary contacts as change-over contact | | | 0 |
| Release class | | | CLASS 10 A |
| Reset function input | | | No |
| Reset function automatic | | | Yes |
| Reset function push-button | | | Yes |

## Approvals

| | | | |
|---|---|---|---|
| Product Standards | | | UL 508; CSA-C22.2 No. 14; IEC/EN 60947-4-1; IEC/EN 60947-5-1; CE marking |
| UL File No. | | | E29184 |
| UL Category Control No. | | | NKCR |
| CSA File No. | | | 12528 |
| CSA Class No. | | | 3211-03 |
| North America Certification | | | UL listed, CSA certified |

| | | |
|---|---|---|
| Specially designed for North America | | No |
| Suitable for | | Branch circuits |
| Max. Voltage Rating | | 600 V AC |
| Degree of Protection | | IEC: IP20, UL/CSA Type: - |

## Characteristics

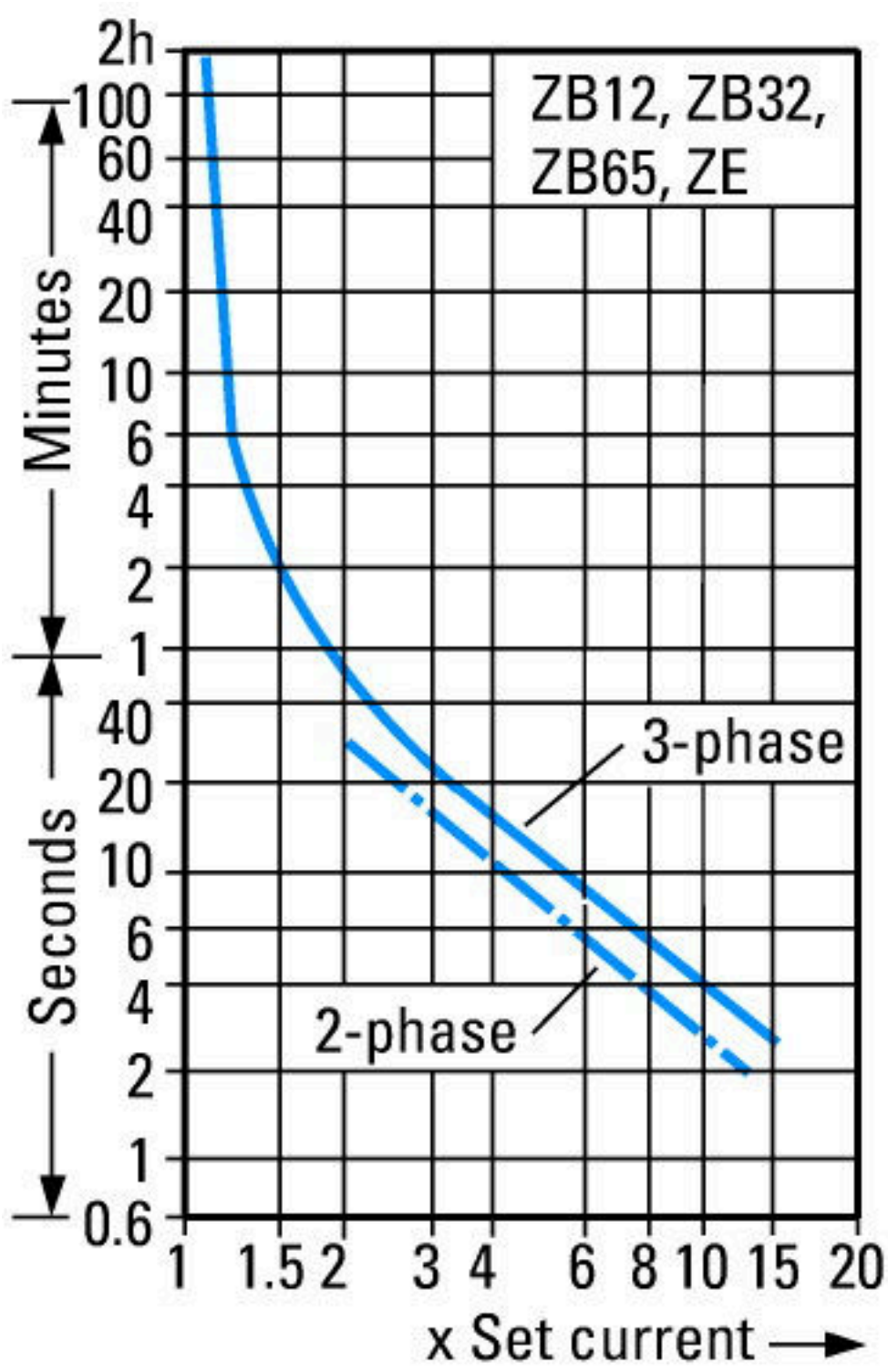


These tripping characteristics are mean values of the spreads at 20 °C ambient air temperature in a cold state.
Tripping time depends on response current.
When the devices are at operational temperature the tripping time of the overload relay falls to approx. 25 % of the read off value.
1: Minimum level, 3-phase
2: Maximum level, 3-phase
3: Minimum marker, 2-phase
4: Highest marker, 2-phase

## Dimensions

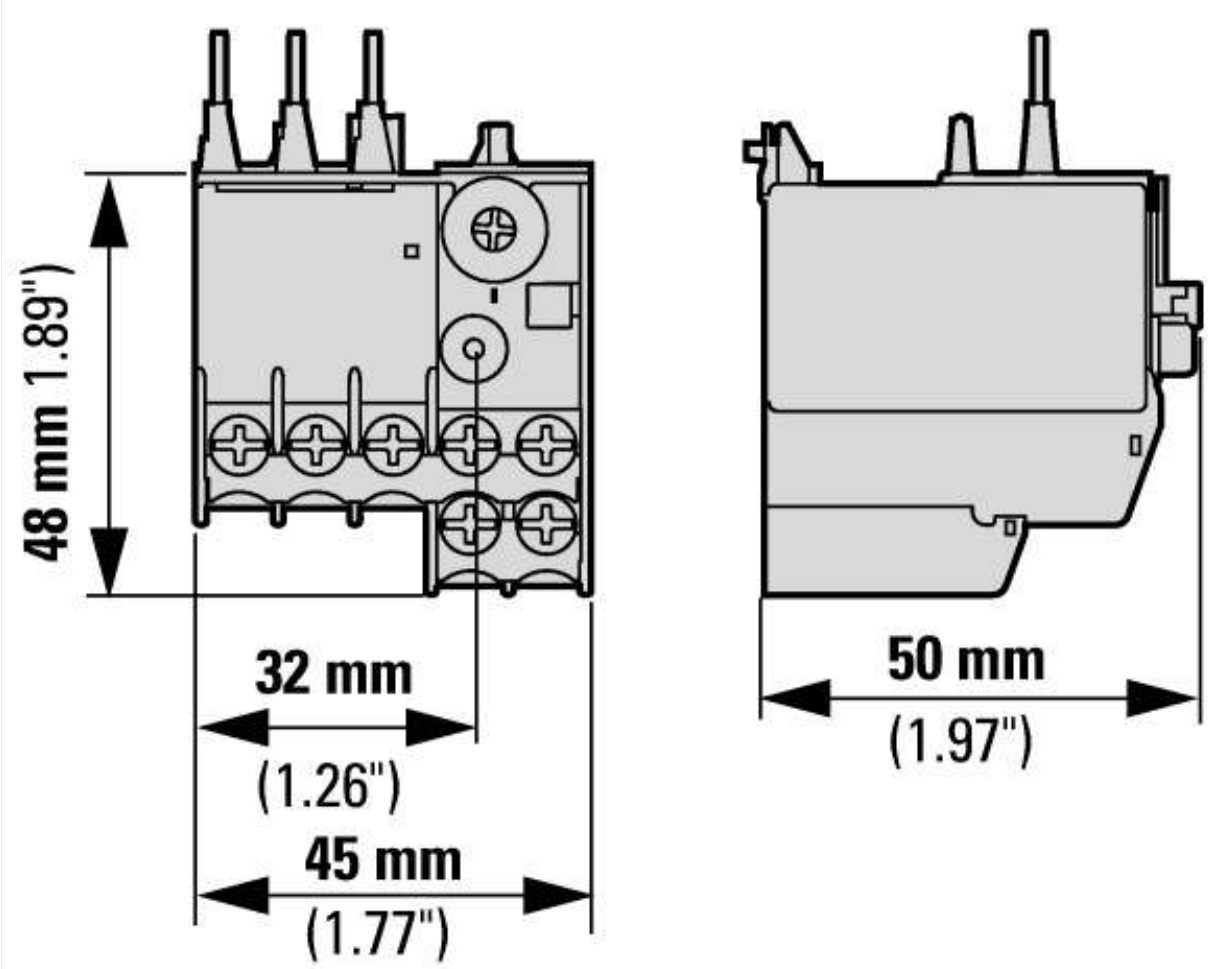


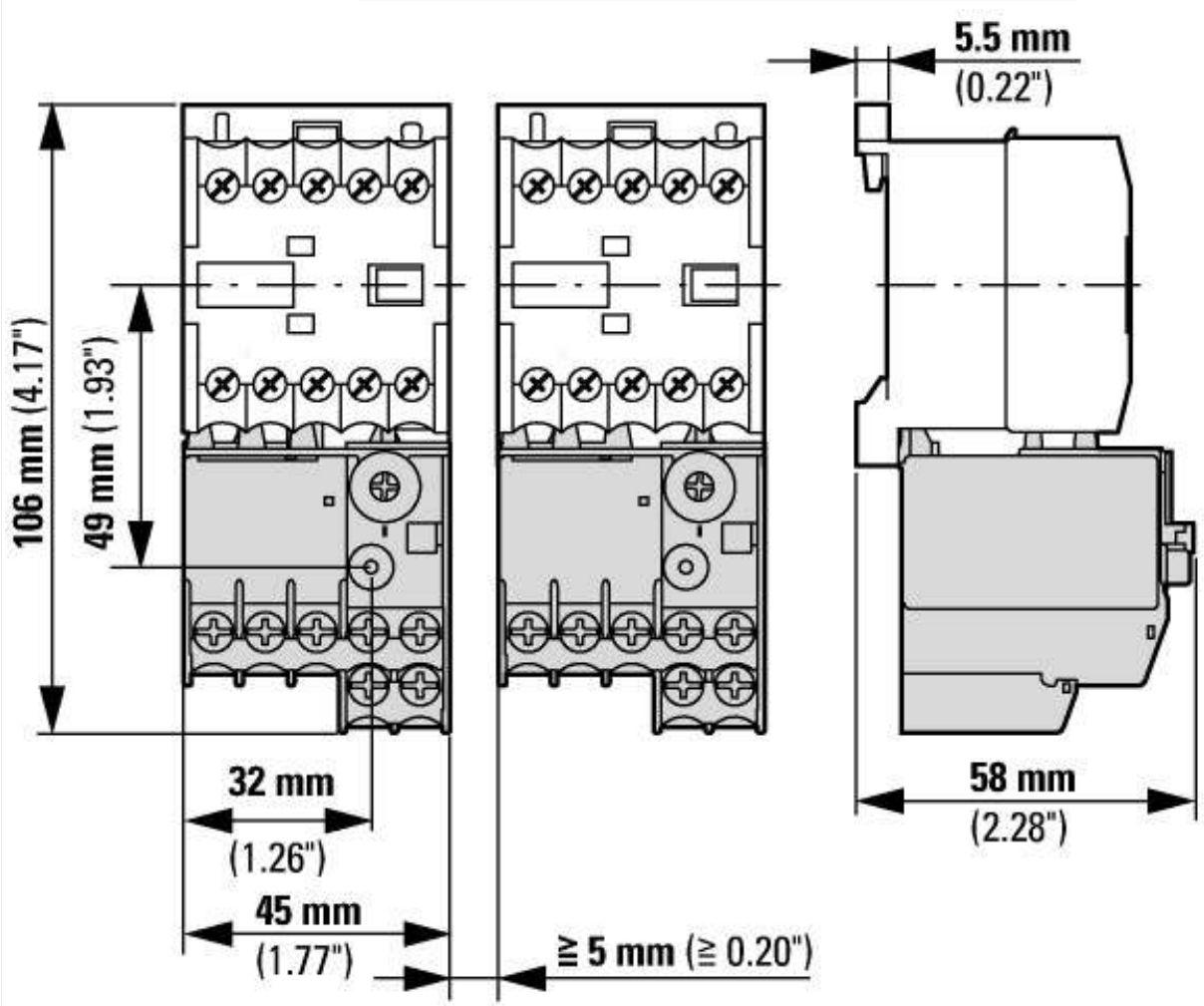


ZE-... + DIL(E)EM-...(-G)

## Additional product information (links)

| | |
|---|---|
| **IL03407007Z (AWA2300-0883) Overload relay** | |
| IL03407007Z (AWA2300-0883) Overload relay | https://es-assets.eaton.com/DOCUMENTATION/AWA_INSTRUCTIONS/IL03407007Z.pdf |
| **MN03407003Z (AWB2300-1425) Overload relay ZE, overload monitoring for EEx e-motors** | |
| MN03407003Z (AWB2300-1425) Overload relay ZE, overload monitoring for EEx e-motors - Deutsch / English | https://es-assets.eaton.com/DOCUMENTATION/AWB_MANUALS/MN03407003Z_DE_EN.pdf |


© 07/2022 by Eaton Industries GmbH