RAFIX 22 QR, switching element, cage clamp terminal, silver, with coupling, for BA9s, 1 NO



fields of application

- Measurement-control-regulation
- Electrical engineering
- Mechanical and system engineering
- Vehicle construction

special features

- Switching elements with cage clamp connection
- Connection with cage clamp: Insert screwdriver (open terminal), insert cable, pull out screwdriver (terminal closes)
- Time and material savings due to elimination of ferrules for stranded wires
- Solid wires can be used
- Less wiring effort by inserting the cables from the rear, as no bending of the wires is necessary.
- Disassembly by loosening the bayonet lever of the coupling

The information in this data sheet only contains general descriptions and / or performance features, which may not apply precisely as described to the respective application, and which my change due to further product enhancements. The technical data, illustrations and other information about our products are the mere results of individual technical testing. These descriptions and other product features are only binding if they expressly agreed upon at the time of the conclusion of a binding contract. In all other cases, we reserve the right to make technical changes as well as changes of availability. Pictures and other graphic illustrations are approximations only. All product names may be trademarks or brand names of the RAFI Group or any other sub-supplier of RAFI. The use of such by any third parties for their own purposes may infringe the rights of the respective entity holding those rights.

RAFI GmbH & Co. KG

Ravensburger Str. 128-134
88276 Berg / Ravensburg
Germany
www.rafi-group.com,
info.headquarters@rafi-group.com

description

RAFIX control units are modular units consisting of several parts. In the RAFIX 22 QR family, they always consist of an actuating element, coupling, and switching element, or of a light attachment, coupling, and lamp socket. For assembly, the switching elements and lamp holders are first snapped into the coupling. Then this unit is snapped onto the actuating element or the signal lamp. To release, a bayonet lever must be actuated.

For illuminable actuators and indicator lights, please use a lamp socket / LED element as the middle element in the coupling.

Switching elements marked in different colors prevent confusion in the bearing and when connecting:

- 1/2 NC contacts = 1/2 red side cover
- 1/2 normally open contacts = 1/2 green side covers
- 1 NC and 1 NO contact = 1 red and 1 green side cover
- Silver contacts = housing base color black
- Gold contacts = housing base color gray
- Lamp socket and LED element = completely black
- The connections belonging to a pair of contacts are marked in color on the connection side and provided with contact identification numbers: 1-2 = NC contact, 3-4 = NO contact
- Safe switching due to silver contacts (max. 400 V)
- Scope of delivery with coupling

Additional information according to UL certificate:

- The terminals are suitable for factory and field wiring.
- The terminals should be mounted with solid wires.
- During the temperature test, wiring terminals reached 112°C. The temperature rating of conductors used to connect to these devices shall be rated for at least 112°C.

technical data

- **general**

Operating temperature, min.	-25 °C
Operating temperature, max.	70 °C
Storage temperature, min.	-40 °C
Storage temperature, max.	80 °C
illuminated	Yes
Lamp socket	BA9s
Packaging unit	10 pcs.
net weight	30.4 g
Operating life electrical	70.000 (10A / 250V AC) cycles 200.000 (5A / 250V AC) cycles

direct links

- RAFI eCatalog

The information in this data sheet only contains general descriptions and / or performance features, which may not apply precisely as described to the respective application, and which my change due to further product enhancements. The technical data, illustrations and other information about our products are the mere results of individual technical testing. These descriptions and other product features are only binding if they expressly agreed upon at the time of the conclusion of a binding contract. In all other cases, we reserve the right to make technical changes as well as changes of availability. Pictures and other graphic illustrations are approximations only. All product names may be trademarks or brand names of the RAFI Group or any other sub-supplier of RAFI. The use of such by any third parties for their own purposes may infringe the rights of the respective entity holding those rights.

RAFI GmbH & Co. KG

Ravensburger Str. 128-134
88276 Berg / Ravensburg
Germany
www.rafi-group.com,
info.headquarters@rafi-group.com

B10 electrical	90.000 (10A / 250V AC) cycles 210.000 (5A / 250V AC) cycles 515.000 (2A / 250V AC) cycles
Environment resistance	IEC 60068-2-14 IEC 60068-2-30 IEC 60068-2-33 IEC 60068-2-78
Vibration resistance according to standard IEC 60068-2-6	5 g at 10 - 500 Hz
MOQ order	10 pcs.
Pollution degree acc. to DIN EN 61010-1	Pollution degree 3
RoHS compliant	Yes
REACH compliant	Yes

mounting diameters

Outside dimension, length	49.9 mm
Outside dimension, width	39.5 mm
Outside dimension, height	30 mm
Mounting depth	56.4 mm

mechanical data

Contact function	1 NO
Contact system	Bridge contact
Fixing	Latching
Abisolierlänge	8 mm
Wire end sleeve required	Nein

electrical data

Rated insulation voltage	400 V
Rated surge voltage	6,000 V
Rated voltage, min.	10 V
Rated voltage, max.	400 V
Voltage type	AC / DC
Rated operating voltage	10-400 V
Rated current, max.	10 A
Power loss	2.00000 W
Category of use AC-15 / B300	400 V / 3,5 A (IEC 60947)
Categories of use	AC-15 / B300 DC-13 / Q300
Category of use DC-13 / Q300	240 V / 0,27 A (IEC 60947)
Conditional short circuit current	1,000 A

The information in this data sheet only contains general descriptions and / or performance features, which may not apply precisely as described to the respective application, and which my change due to further product enhancements. The technical data, illustrations and other information about our products are the mere results of individual technical testing. These descriptions and other product features are only binding if they expressly agreed upon at the time of the conclusion of a binding contract. In all other cases, we reserve the right to make technical changes as well as changes of availability. Pictures and other graphic illustrations are approximations only. All product names may be trademarks or brand names of the RAFI Group or any other sub-supplier of RAFI. The use of such by any third parties for their own purposes may infringe the rights of the respective entity holding those rights.

RAFI GmbH & Co. KG

Ravensburger Str. 128-134
88276 Berg / Ravensburg
Germany
www.rafi-group.com,
info.headquarters@rafi-group.com

drawings

System drawing

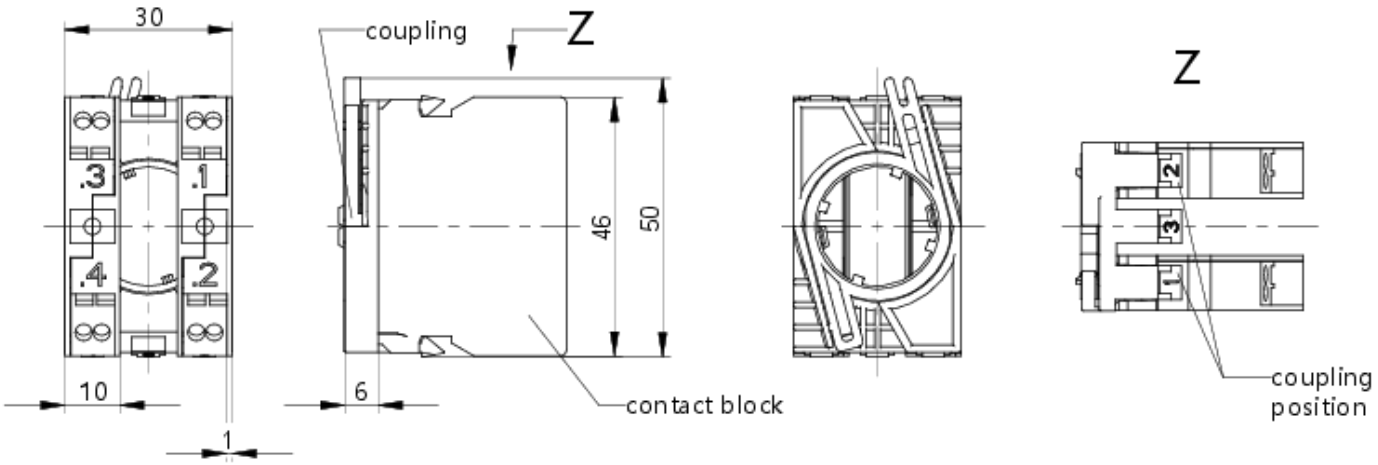

The information in this data sheet only contains general descriptions and / or performance features, which may not apply precisely as described to the respective application, and which my change due to further product enhancements. The technical data, illustrations and other information about our products are the mere results of individual technical testing. These descriptions and other product features are only binding if they expressly agreed upon at the time of the conclusion of a binding contract. In all other cases, we reserve the right to make technical changes as well as changes of availability. Pictures and other graphic illustrations are approximations only. All product names may be trademarks or brand names of the RAFI Group or any other sub-supplier of RAFI. The use of such by any third parties for their own purposes may infringe the rights of the respective entity holding those rights.

RAFI GmbH & Co. KG

Ravensburger Str. 128-134
88276 Berg / Ravensburg
Germany
www.rafi-group.com,
info.headquarters@rafi-group.com