

Version 12

LINE

Communication Interfaces





- Presentation
- Range
- Dimensions
- Factory Settings
- Characteristics
- Functions
- Wiring

Presentation

JM Concept has developed an interfacing system to decentralize the analog inputs and outputs and to send the data back via fieldbus.

The principle is based on JM Concept's analog signal processing and isolation technology.

The system is fully modular and scalable. The inputs can be process inputs as well as electrical quantities, temperature (PT100, Thermocouple with CSF, outoutput of other sensors), or even digital inputs. There are no limitations.

The unit is hot pluggable and any type of module can be added at any time, without limitation.

All measurements are transferred to a concentrator. There is a concentrator model adapted to each type of fieldbus. If the PLC evolves and the fieldbus is different, it is only necessary to change the concentrator, all the acquisition, with its isolation remains identical.

Range

	Communication				
	Modbus TCP	Profinet	Ethernet IP	Profibus	Modbus RTU
MIPLINE	✓				
MPNLINE		✓			
EIPLINE			✓		
MPBLINE				✓	
MRSLINE					✓



Dimensions

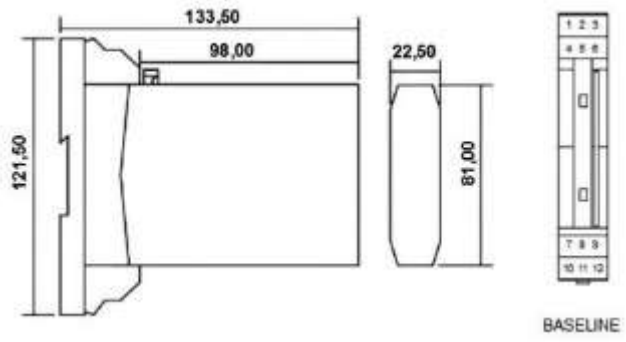

Dimensions : width : 22,5 mm - Height : 81 mm - Depth : 98 mm

BASELINE boards are to be ordered separately

22,5 mm Case : Reference BL01ALV

For multi-converter boards, please consult us.

Factory Settings

Modbus parameters	**Communication speed**	**Synchronization**	**Delay at the start**	
	38400 bauds	Manual	0 min 0 sec	
Bus parameters	**Converting scenario values**	**On off-bus ground**		
	in full	The contact is closed		
		Scenarios in writing maintain their value		
Scenarios	**Scenario 1**		**Scenario 2**	
	Slave number	101	Slave number	101
	Operation	Reading 4 floats	Operation	Writing 2 floats
	Register	6000	Register	6002

For MIPLINE and EIPLINE :

Ethernet parameters	**IP address**	**Mask**	**Gateway**	**DHCP**	**BootP**
	192.168.0.1	255.255.255.0	192.168.0.254	Desactivated	Desactivated

Characteristics

Communication	
Modbus TCP	MIPLINE
Profinet	MPNLINE
Ethernet IP	EIPLINE
Profibus	MPBLINE
Modbus RTU	MRSLINE
Isolation	
Supply / RS485-USB-digital output-connector (RJ45 or Sub-D9 or 6 points connector) on the front	4200Vrms, 50Hz, 1mn
USB / RS485 / digital output / connector (RJ45 or Sub-D9 or 6 points connector) on the front	2500Vrms, 50Hz, 1mn
Auxiliary source	
Voltage supply	20-240Vdc or 90-230Vac 50/60Hz
General characteristics	
Maximum of consumption	MPILINE, MPNLINE, EIPLINE : <7VA MPNLINE, MRSLINE : <6VA
Operating temperature	-10°C … +60°C
Storage temperature	-25°C … +80°C
Protection factor	IP20 Black self-extinguishing polyamide housing V0

Functions

Display functions	
LED indicators	1 green LED
Programming	Programming via USB with IXLINE software
Input	
Inputs display	The IXLINE application allows to visualize the reading and writing values of the scenarios
Smart functions	
Scenarios	Allows you to set up read and write requests between the concentrator and the input/output modules
Outputs	
Visualization of the outputs	The IXLINE application allows to visualize the reading and writing values of the scenarios
Links and communication	
RS485 MODBUS RTU	RS485 MODBUS RTU bidirectional digital link allowing to : • recover the measurements and transmit them in digital format • configure and control the device Programmable delay for starting the serial communication link RS485 Modbus RTU Choice of transmission speed (from 1200 bauds to 115200 bauds)
Ethernet	**MIPLINE, MPNLINE, EIPLINE** Bi-directional link via RJ45 port allowing to read or write PLC register values. The LINE acts as a concentrator between the Ethernet network and the Modbus RTU network. A PLC on the Ethernet network can communicate with JM devices located on the same RS485 bus as the LINE.
Serial port	**MRSLINE, MPBLINE** Bi-directional link via the serial port allowing to read or write the values of the PLC registers. The LINE acts as a concentrator between the PLC's serial network and the Modbus RTU network. A PLC can communicate with JM devices located on the same RS485 bus as the LINE.
Digital bus	Access to the digital bus via the USB socket and the **IXLINE** software (when converters are used on the interface boards)
USB front	USB front panel to connect directly to the USB port of a PC for programming via the IXLINE software

Wiring

EIPLINE

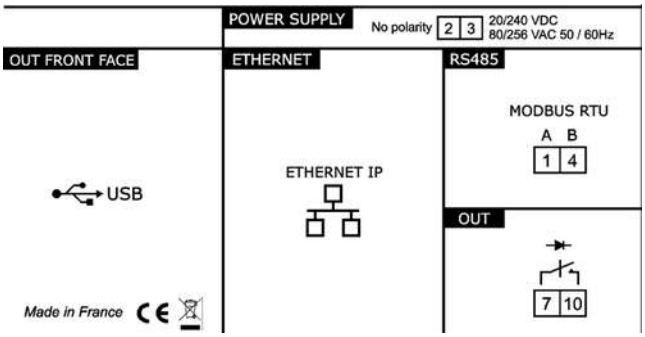

MPNLINE

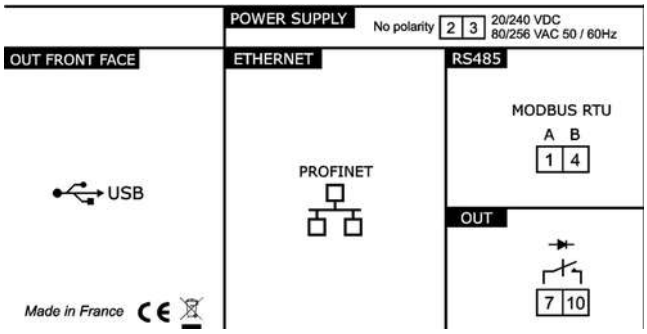

MIPLINE

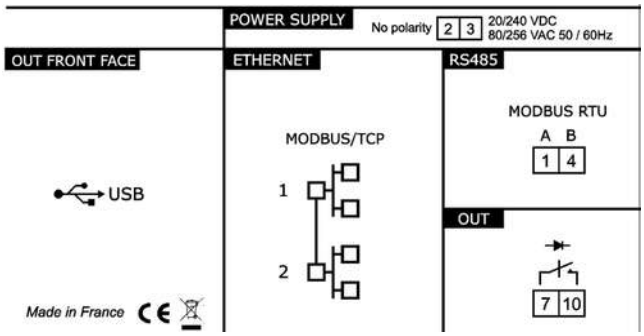

MPBLINE

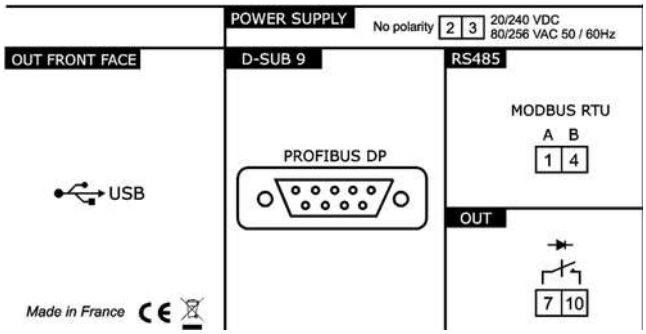

MRSLINE

