Type: LXPRT-4W

Phase Failure, Phase Sequence, Under Voltage plus Time Delay

Terminal Protection to IP20



Dims: to DIN 43880
W. 17.5mm

- ❑ ***NEW*** **17.5mm DIN rail housing**
- ❑ **Microprocessor based**
- ❑ **True R.M.S. monitoring**
- ❑ **Monitors own supply and detects an Under voltage condition on one or more phases**
- ❑ **Measures phase to neutral voltages**
- ❑ **Detects incorrect phase sequence, phase loss and neutral loss**
- ❑ **Adjustment for Under voltage trip level**
- ❑ **Adjustment for Time delay (from an Under voltage condition)**
- ❑ **1 x SPDT relay output 8A**
- ❑ **Green LED indication for supply status**
- ❑ **Red LED indication for relay status**

ISO 9001:2015
Cert. No. 14125771

FUNCTION DIAGRAM

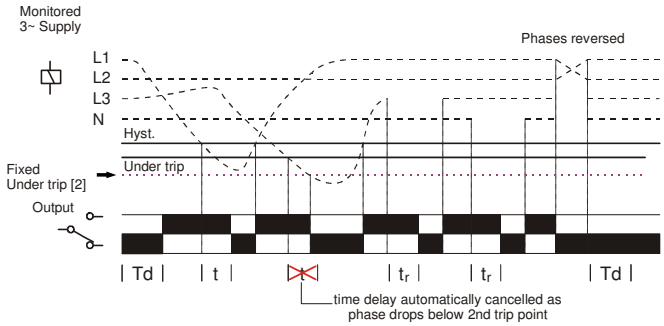

INSTALLATION AND SETTING

Installation work must be carried out by qualified personnel.

- BEFORE INSTALLATION, ISOLATE THE SUPPLY.
- Connect the unit as required. The Connection Diagram below shows a typical installation, whereby the supply to a load is being monitored by the Phase monitoring relay. If a fault should occur (i.e. fuse blowing), the relay will de-energise and assuming control of the external Contactor, de-energise the Contactor as well.

Applying power.

- Set the "<U (volts)" ❹ and "Delay (t)" ❸ adjustment to minimum.
- Apply power and the green "Power supply" ❶ and red "Relay" ❷ LED's will illuminate, relay energise and contacts 15 and 18 will close. Refer to the troubleshooting table if the unit fails to operate correctly.

Setting the unit (with power applied).

- Accurate setting can be achieved by adjusting the trip level "<U (volts)" until the unit trips (relay de-energises) then by decreasing the trip level "<U (volts)" until the relay re-energises. Close setting the trip level ensures the unit will detect a phase loss even with a large percentage of re-generative voltage.
- In order to set the unit as previously described but without causing disruption to the equipment being controlled/monitored, set the "Delay (t)" to maximum. It will now be possible to establish the trip point when the red "Relay" LED starts to flash. Decrease the trip level setting to stop the LED flashing. (Note: If the time delay is allowed to expire, the output relay will de-energise)
- If large supply variations are anticipated, the trip level should be set further from the nominal voltage.
- Set the "Delay (t)" as required. (Note that the delay is only effective should the supply drop below the set trip level. However, if during an under voltage condition the supply drops below the 2nd under voltage trip level, any set time delay is automatically cancelled and the relay de-energises).
  Note: If the supply voltage increases above the maximum "<U" trip setting by approx. 10% or more, the relay will de-energise immediately.

Troubleshooting.

The table below shows the status of the unit during a fault condition.

Supply fault	Green LED	Red LED	Relay
Phase or neutral missing	On	Off	De-energised
Phases reversed (no delay)	Flashing	Off	De-energised
Under Voltage condition (during timing)	On	Flashing	Energised for set delay (t)
Under Voltage condition (after timing)	On	Off	De-energised
Phase below 70% of Un (fixed under trip level [2])	On	Off	De-energised

TECHNICAL SPECIFICATION

Supply/monitoring voltage			
U* **(L1, L2, L3, N):**		63.5V (110V), 133V (230V), 230V (400V)[1] AC (see note)	
Frequency range:		48 – 63Hz	
Supply variation:		± 30%	
Overvoltage category:		III (IEC 60664)	
Rated impulse withstand voltage:		[1] 4kV (1.2/50µS) IEC 60664	
Power consumption (max.):		6VA	
Monitoring mode:		Under voltage	
Trip levels:		Under [2]	Under
Supply voltage	63.5V:	44.5V	48 – 79V
	133V:	93V	100 – 166V
	230V:	161V	173 – 288V
Hysteresis:		≈ 2% of trip level (factory set)	
Setting accuracy:		± 3%	
Repeat accuracy:		± 0.5% at constant conditions	
Immunity from micro power cuts:		<50mS	
Response time:		≈ 50mS	
Time delay (t):		0.2 – 10 sec. (± 5%)	
		Note: actual delay (t) = adjustable delay + response time	
Delay from Phase/Neutral loss (tr):		≈ 150mS (worst case = tr x 2)	
Power on delay (Td):		≈ 1 sec. (worst case = Td x 2)	
Power on indication:		Green LED	
Relay status indication:		Red LED	
Ambient temp:		-20 to +60°C	
Relative humidity:		+95%	
Output **(15, 16, 18)**:		SPDT relay	
Output rating:		AC1	250V 8A (2000VA)
		AC15	250V 5A (no), 3A (nc)
		DC1	25V 8A (200W)
Electrical life:		≥ 150,000 ops at rated load	
Dielectric voltage:		2kV AC (rms) IEC 60947-1	
Rated impulse withstand voltage:		4kV (1.2/50µS) IEC 60664	
Housing:		Orange flame retardant UL94	
Weight:		75g	
Mounting option:		On to 35mm symmetric DIN rail to BS EN 60715 or direct surface mounting via 2 x M3.5 or 4BA screws using the black clips provided on the rear of the unit.	
Terminal conductor size		≤ 2 x 2.5mm² solid or stranded	
Approvals:		Conforms to IEC.	
		UL LISTED IND. CONT. EQ. E111187	
		CE, and RoHS Compliant. EMC: Immunity: EN 61000-6-2 (EN 61000-4-3 15V/m 80MHz - 2.7GHz) Emissions: EN 61000-6-4	

* Please state Supply/monitoring voltage when ordering

Note:
The "Supply / monitoring voltage U" refers to the phase to neutral nominal voltage for the product and voltage variants available. To convert these voltages to a phase to phase voltage, multiply by 1.732. The voltage shown in brackets is the equivalent phase to phase voltage.

CONNECTION DIAGRAM

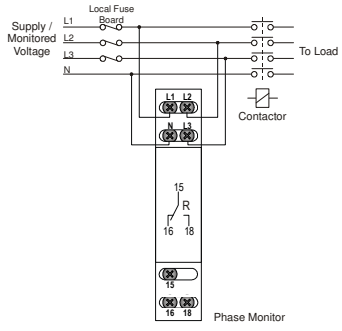

SETTING DETAILS

1. Power supply status (Green) LED
2. Relay output / Timing status (Red) LED
3. "Delay" adjustment
4. "<U (volts) Under voltage trip level adjustment^

^Example on the right shows the 230V (400V) version. The voltages shown on the scale are phase/line to neutral voltages.

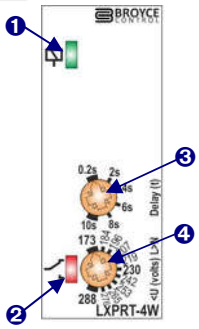

DIMENSIONS

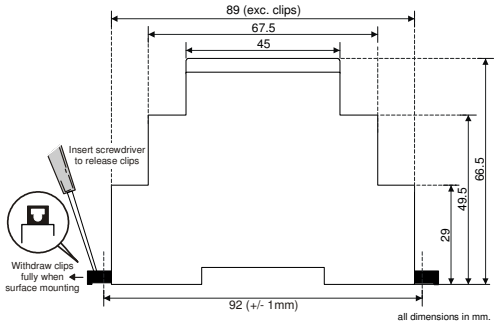

Broyce Control Ltd., Pool Street, Wolverhampton, West Midlands WV2 4HN. England
Tel: +44 (0) 1902 773746 Fax: +44 (0) 1902 420639 Email: sales@broycecontrol.com Web: www.broycecontrol.com

The Information provided in this literature is believed to be accurate (subject to change without prior notice); however, use of such information shall be entirely at the user's own risk.