EIO344

Bluetooth mesh IO-Link adapter

BLUETOOTH MESH IO-LINK ADAPTER

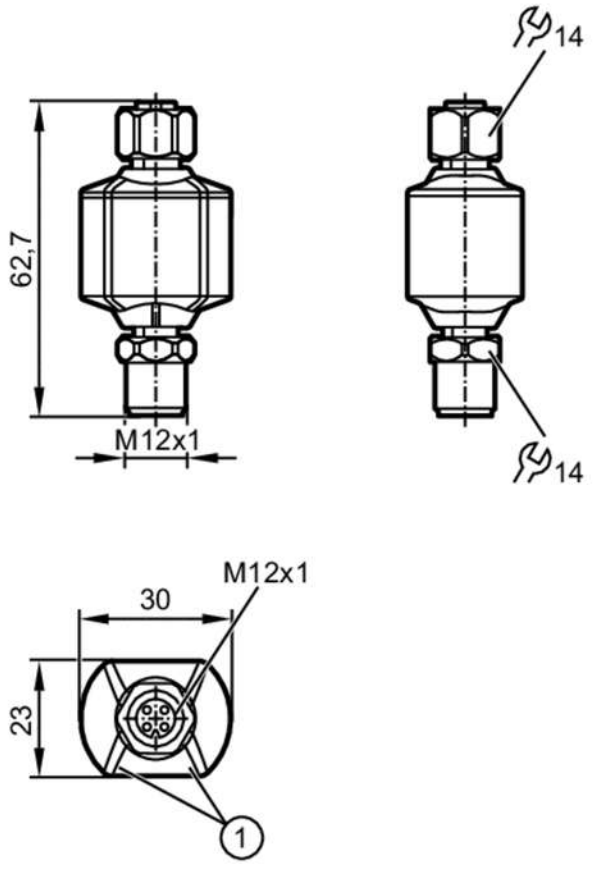

1 LEDs

Product characteristics		
Number of inputs and outputs		Number of digital outputs: 1
Application		
Special feature		Gold-plated contacts
Radio approval for		EU/RED; Great Britain; USA; Canada; Japan; Namibia; Singapore; Australia; India; Vietnam; New Zealand; Indonesia; Malaysia; Thailand; Ukraine; Taiwan; Argentina; Chile; South Korea; South Africa; Mexico; China; Brazil
Note on radio approval		The list of countries applying the European Radio Equipment Directive 2014/53/EU (RED) can be found under “Downloads”.
Electrical data		
Operating voltage	[V]	18...30 DC; (limitation due to ES1 and PS2)
Nominal voltage DC	[V]	24
Current consumption	[mA]	< 20
Protection class		III
Reverse polarity protection		yes; (supply side)
Max. current load total	[A]	0.83
Inputs / outputs		
Number of inputs and outputs		Number of digital outputs: 1

EIO344

Bluetooth mesh IO-Link adapter

BLUETOOTH MESH IO-LINK ADAPTER

Outputs			
Output signal		switching signal; IO-Link	
Electrical design		PNP	
Number of digital outputs		1	
Output function		normally open / normally closed	
Max. voltage drop switching output DC	[V]	2.5	
Permanent current rating of switching output DC	[mA]	200	
Type of short-circuit protection		pulsed	
Short-circuit proof		yes	
Overload protection		yes	
Interfaces			
Communication interface		IO-Link; Bluetooth	
Supported DeviceIDs		**Type of operation**	**DeviceID**
		IO-Link Device	1591
Bluetooth			
Transmission standard		BLE 5.0	
Frequency band		2,4 GHZ	
Transmission power	[mW]	10; (10 dBm)	
Range		typ. 20 m	
IO-Link Device			
Transmission type		COM2 (38,4 kBaud)	
IO-Link revision		1.0; 1.1	
SDCI standard		IEC 61131-9	
Profiles		Common - I&D	Identification and Diagnosis
Required master port type		A	
Min. process cycle time	[ms]	4.4	
IO-Link Master			
Number of ports		1	
Unterstützte IO-Link Revision		1.1	
Transmission type		COM1 (4,8 kBaud); COM2 (38,4 kBaud); COM3 (230,4 kBaud)	
SDCI standard		IEC 61131-9	
Operating conditions			
Ambient temperature	[°C]	-25...60	
Storage temperature	[°C]	-25...70	
Protection		IP 67; IP 69K	
Tests / approvals			
EMC		DIN EN 61000-6-2	
		DIN EN 61000-6-3	
Shock resistance		DIN EN 60068-2-27	15 g (6 ms)
Vibration resistance		DIN EN 60068-2-6	2 g (10...150 Hz)
MTTF	[years]	218	
UL approval		File number UL	E537924

EIO344

Bluetooth mesh IO-Link adapter

BLUETOOTH MESH IO-LINK ADAPTER

Mechanical data		
Weight	[g]	92.2
Materials		PA; stainless steel (316L/1.4404); FKM

Displays / operating elements		
Display	operation	LED, green
	warning / fault	LED, red
	Bluetooth	LED, blue

Remarks	
Pack quantity	1 pcs.

Electrical connection - plug

Connector: 1 x M12; coding: A; Contacts: gold-plated



1	L+ supply
2	OUT2 linked through
3	L- supply
4	OUT1 switching output or IO-Link

Electrical connection - socket

Connector: 1 x M12; coding: A; Contacts: gold-plated



1	L+ supply
2	OUT2 linked through
3	L- supply
4	IO-Link
5	not used

EIO344

Bluetooth mesh IO-Link adapter

BLUETOOTH MESH IO-LINK ADAPTER

Electrical connection

Connection

