Bourdon tube pressure gauge, stainless steel
For the process industry, standard version
Models 232.50, 233.50, NS 63 [2 ½"], 100 [4"] and 160 [6"]

for further approvals,
see page 6

Applications

- For gaseous and liquid aggressive media that are not highly viscous or crystallising, also in aggressive environments
- Chemical and petrochemical industries, oil and gas industry, power engineering and also water and wastewater technology
- Machine building and general plant construction

Special features

- Excellent load cycle stability and shock resistance
- With case filling (model 233.50) for applications with high dynamic pressure loads and vibrations
- Completely from stainless steel
- Scale ranges from 0 … 0.6 to 0 … 1,600 bar or 0 ... 10 to 0 ... 20,000 psi



Bourdon tube pressure gauge, model 232.50, NS 100 [4"]

Description

This high-quality Bourdon tube pressure gauge has been designed especially for the process industry.

The use of high-quality stainless steel materials and the robust design are geared to applications in the chemical and process engineering industries. Thus the instrument is suitable for liquid and gaseous media, also in aggressive environments.

Scale ranges of 0 … 0.6 to 0 … 1,600 bar [0 ... 10 to 0 ... 20,000 psi] ensure the measuring ranges required for a wide variety of applications.

WIKA manufactures and qualifies the pressure gauge in accordance with the standards EN 837-1 and ASME B40.100. As a safety function, this instrument has a blow-out device with blow-out plug on the back of the case. In the event of a failure, overpressure can escape there.

The model 233.50 with liquid-filled case is suitable for high dynamic pressure loads and vibrations.

Smart in sensing

Data sheets showing similar products:
Stainless steel, safety version; see data sheet PM 02.04
Bourdon tube pressure gauge with switch contacts; see data sheet PV 22.02
Monel version; see data sheet PM 02.33
Pressure gauge per EN 837-1 with mounted diaphragm seal; see data sheet DS 95.12

Specifications

Basic information	
Standard	■ EN 837-1 ■ ASME B40.100
	For information on the “Selection, installation, handling and operation of pressure gauges”, see technical information IN 00.05.
Further version	■ For oxygen, oil- and grease-free ■ Per NACE [1] MR0175 / ISO 15156, use in H_2S-containing environments in oil and gas production ■ Per NACE [1] MR0103 / ISO 17945, metals resistant to sulphide stress cracking ■ With pre-volume deflagration flame arrester [2] for mounting to zone 0 (EPL Ga); model 910.21; see data sheet AC 91.02 ■ Monel version; models 262 and 263; see data sheet PM 02.33
Nominal size (NS)	■ Ø 63 mm [2 ½"] ■ Ø 100 mm [4"] ■ Ø 160 mm [6"]
Connection location	■ Lower mount (radial) ■ Lower back mount ■ Centre back mount (only for NS 63 [2 ½"])
Window	Laminated safety glass (NS 63 [2 ½"]: Polycarbonate)
Case	
Design	Safety level “S1” per EN 837-1 With blow-out device at case circumference, 12 o'clock (NS 63 [2 ½"]) and on the back of the case (NS 100 [4"] and 160 [6"]) Scale ranges ≤ 0 ... 16 bar [≤ 0 ... 300 psi] with compensating valve to vent and reseal case
Material	■ Stainless steel 1.4301 (304) ■ Stainless steel 1.4571 (316Ti)
Ring	Bayonet ring, stainless steel
Mounting	■ Without ■ Panel mounting flange, stainless steel ■ Panel mounting flange, polished stainless steel ■ Triangular profile ring with mounting bracket, polished stainless steel ■ Surface mounting flange, stainless steel
Case filling (model 233.50)	■ Without ■ Glycerine ■ Glycerine-water mixture for NS 100 [4"] and 160 [6"] with scale range ≤ 0 ... 2.5 bar [≤ 0 ... 40 psi] or for NS 63 [2 ½"] with scale range ≤ 0 ... 4 bar [≤ 0 ... 60 psi] ■ Silicone oil
Movement	■ Stainless steel ■ Stainless steel 1.4404 (316L) ■ everlast® version

1) General information about NACE standards; see data sheet IN 00.21
2) Only for instruments with Ex approval

Measuring element	
Type of measuring element	Bourdon tube, C-type or helical type
Material	Stainless steel 1.4404 (316L)
Leak tightness	■ Helium tested, leakage rate: $< 5 \cdot 10^{-3}$ mbar l/s ■ Helium tested, leakage rate: $< 1 \cdot 10^{-6}$ mbar l/s

Accuracy specifications		
Accuracy class		
NS 63 [2 ½"]	■ EN 837-1	Class 1.6
	■ ASME B40.100	±2 % | ±1 % | ±2 % of measuring span (grade A)
NS 100 [4"], 160 [6"]	■ EN 837-1	Class 1.0
	■ ASME B40.100	±1 % of measuring span (grade 1A)
Temperature error	On deviation from the reference conditions at the measuring system: ≤ ±0.4 % per 10 °C [≤ ±0.4 % per 18 °F] of full scale value	
Reference conditions		
Ambient temperature	+20 °C [+68 °F]	

Scale ranges

bar	
0 ... 0.6 [1]	0 ... 40
0 ... 1	0 ... 60
0 ... 1.6	0 ... 100
0 ... 2.5	0 ... 160
0 ... 4	0 ... 250
0 ... 6	0 ... 400
0 ... 10	0 ... 600
0 ... 16	0 ... 1,000
0 ... 25	0 ... 1,600

kg/cm²	
0 ... 0.6 [1]	0 ... 40
0 ... 1	0 ... 60
0 ... 1.6	0 ... 100
0 ... 2.5	0 ... 160
0 ... 4	0 ... 250
0 ... 6	0 ... 400
0 ... 10	0 ... 600
0 ... 16	0 ... 1,000
0 ... 25	0 ... 1,600

kPa	
0 ... 60 [1]	0 ... 4,000
0 ... 100	0 ... 6,000
0 ... 160	0 ... 10,000
0 ... 250	0 ... 16,000
0 ... 400	0 ... 25,000
0 ... 600	0 ... 40,000
0 ... 1,000	0 ... 60,000
0 ... 1,600	0 ... 100,000
0 ... 2,500	0 ... 160,000

MPa	
0 ... 0.06 [1]	0 ... 4
0 ... 0.1	0 ... 6
0 ... 0.16	0 ... 10
0 ... 0.25	0 ... 16
0 ... 0.4	0 ... 25
0 ... 0.6	0 ... 40
0 ... 1	0 ... 60
0 ... 1.6	0 ... 100
0 ... 2.5	0 ... 160

psi	
0 ... 10 [1]	0 ... 1,000
0 ... 15	0 ... 1,500
0 ... 30	0 ... 2,000
0 ... 60	0 ... 3,000
0 ... 100	0 ... 4,000
0 ... 160	0 ... 5,000
0 ... 200	0 ... 6,000
0 ... 300	0 ... 7,500
0 ... 400	0 ... 10,000
0 ... 600	0 ... 15,000
0 ... 800	0 ... 20,000

1) Not available for NS 63 [2 ½"]

Vacuum and +/- scale ranges

bar	
-0.6 ... 0 [1]	-1 ... +5
-1 ... 0	-1 ... +9
-1 ... +0.6	-1 ... +15
-1 ... +1.5	-1 ... +24
-1 ... +3	

MPa	
-0.06 ... 0 [1]	-0.1 ... +0.5
-0.1 ... 0	-0.1 ... +0.9
-0.1 ... +0.06	-0.1 ... +1.5
-0.1 ... +0.15	-0.1 ... +2.4
-0.1 ... +0.3	

kPa	
-60 ... 0 [1]	-100 ... +500
-100 ... 0	-100 ... +900
-100 ... +60	-100 ... +1,500
-100 ... +150	-100 ... +2,400
-100 ... +300	

psi	
-30 inHg ... 0	-30 inHg ... +100
-30 inHg ... +15	-30 inHg ... +160
-30 inHg ... +30	-30 inHg ... +200
-30 inHg ... +60	-30 inHg ... +300

1) Not available for NS 63 [2 ½"]

Further details on: Scale ranges	
Special scale ranges	Other scale ranges on request
Unit	■ bar ■ psi ■ kg/cm² ■ kPa ■ MPa
Increased overload safety	■ Without ■ 2 times ■ 3 times ■ 4 times ■ 5 times
	The possibility of selection depends on scale range and nominal size
Vacuum resistance	■ Without ■ Vacuum-resistant to -1 bar
Dial	
Scale colour	Black
Material	Aluminium
Special scale	■ Without ■ With temperature scale for refrigerant, e.g. for NH_3: R 717
	Other scales or customer-specific dials, e.g. with red mark, circular arcs or circular sectors, on request
Pointer	
Instrument pointer	Aluminium, black
Mark pointer/drag pointer	■ Without ■ Red mark pointer on dial, fixed ■ Red mark pointer on window, adjustable ■ Mark pointer on bayonet ring, adjustable ■ Red drag pointer on window, adjustable
Pointer stop pin	■ Without ■ At zero point (only for NS 63 [2 ½"]) ■ At 6 o'clock (only for NS 100 [4"], 160 [6"])

Process connection	
Standard	■ EN 837-1 ■ ISO 7 ■ ANSI/B1.20.1
Size	
EN 837-1	■ G ⅛ B, male thread ■ G ¼ B, male thread ■ G ½ B, male thread ■ M12 x 1.5, male thread ■ M20 x 1.5, male thread
ISO 7	■ R ¼, male thread ■ R ½, male thread
ANSI/B1.20.1	■ ¼ NPT, male thread ■ ½ NPT, male thread
Restrictor	■ Without ■ Ø 0.6 mm [0.024"], stainless steel ■ Ø 0.3 mm [0.012"], stainless steel
Material (wetted)	
Process connection	■ NS 100 [4"], 160 [6"]: Stainless steel 1.4404 (316L) ■ NS 63 [2 ½"]: Stainless steel 1.4571 (316 Ti)
Bourdon tube	Stainless steel 1.4404 (316L)

Other process connections on request

Operating conditions		
Medium temperature		
Unfilled instruments	-40 ... +200 °C [-40 ... +392 °F]	
Instruments with glycerine filling	-20 ... +100 °C [-4 ... +212 °F]	
Instruments with silicone oil filling	-40 ... +100 °C [-40 ... +212 °F]	
Ambient temperature		
Unfilled instruments or with silicone oil filling	-40 ... +60 °C [-40 ... +140 °F]	
Instruments with glycerine filling	-20 ... +60 °C [-4 ... +140 °F]	
Pressure limitation		
NS 63 [2 ½"]	Steady	3/4 x full scale value
	Fluctuating	2/3 x full scale value
	Short time	Full scale value
NS 100 [4"], 160 [6"]	Steady	Full scale value
	Fluctuating	0.9 x full scale value
	Short time	1.3 x full scale value
Ingress protection per IEC/EN 60529	■ IP65 ■ IP66 (only selectable for scale ranges from 0 ... 20 bar [0 ... 400 psi])	

Approvals

Logo	Description	Region
CE	**EU declaration of conformity** Pressure equipment directive PS > 200 bar, module A, pressure accessory	European Union
UKCA	**UKCA** Pressure equipment (safety) regulations	United Kingdom
-	**CRN** Safety (e.g. electr. safety, overpressure, ...) For full scale value ≤ 1,000 bar	Canada

Optional approvals

Logo	Description	Region
CE Ex	**EU declaration of conformity** ATEX directive Hazardous areas - Ex h Gas II 2G Ex h IIC T6 ... T1 Gb X Dust II 2D Ex h IIIC T85°C ... T450°C Db X	European Union
UKCA	**UKCA** Equipment and protective systems intended for use in potentially explosive atmospheres regulations	United Kingdom
EAC Ex	**EAC** Hazardous areas	Eurasian Economic Community
	Ex Ukraine Hazardous areas	Ukraine
	PAC Kazakhstan Metrology, measurement technology	Kazakhstan
-	**MChS** Permission for commissioning	Kazakhstan
-	**PAC Ukraine** Metrology, measurement technology	Ukraine
	PAC Uzbekistan Metrology, measurement technology	Uzbekistan
-	**PAC China** Metrology, measurement technology	China
DNV	**DNV** Ships, shipbuilding (e.g. offshore)	International

Manufacturer's information and certificates

Logo	Description
-	Pressure equipment directive (PED) for maximum allowable pressure PS ≤ 200 bar
-	Suitability of wetted materials for drinking water in accordance with the European 4MS initiative

Certificates (option)

Certificates	
Certificates	■ 2.2 test report per EN 10204 (e.g. state-of-the-art manufacturing, indication accuracy) ■ 3.1 inspection certificate per EN 10204 (e.g. material proof for wetted metal parts, indication accuracy) ■ PCA calibration certificate, traceable and accredited in accordance with ISO/IEC 17025 ■ Calibration certificate by a national accreditation body, traceable and accredited in accordance with ISO/IEC 17025 on request
Recommended calibration interval	1 year (dependent on conditions of use)

→ For approvals and certificates, see website

Dimensions in mm [in]

Lower mount (radial)

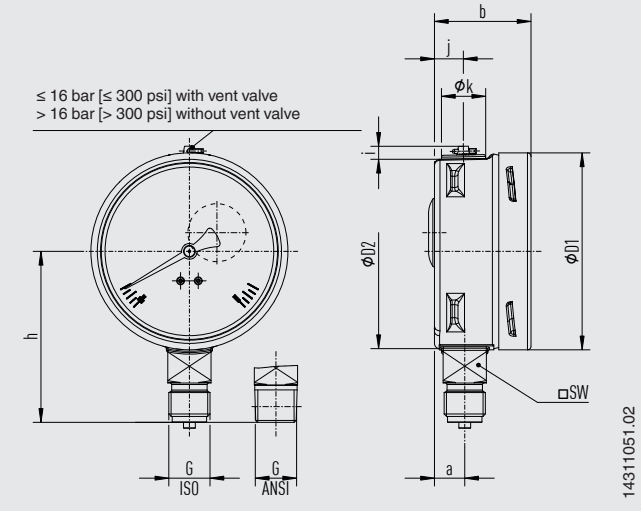

NS	Weight	
	Model 232.50	Model 233.50
63 [2 ½"]	approx. 0.16 kg [0.35 lbs]	approx. 0.20 kg [0.44 lbs]
100 [4"]	approx. 0.6 kg [1.32 lbs]	approx. 0.9 kg [1.98 lbs]
160 [6"]	approx. 1.1 kg [2.43 lbs]	approx. 2.0 kg [4.41 lbs]

Process connection with thread per EN 837-1

NS	G	Dimensions in mm [in]								
		h ±1	a	b	D1	D2	i	j	k	SW
63 [2 ½"]	G ¼ B	54 [2.13]	9.5 [0.37]	33 [1.30]	63 [2.48]	62 [2.44]	6 [0.24]	10 [0.39]	15 [0.59]	14 [0.55]
	G ⅛ B	51 [2.01]	9.5 [0.37]	33 [1.30]	63 [2.48]	62 [2.44]	6 [0.24]	10 [0.39]	15 [0.59]	14 [0.55]
	M12 x 1.5	54 [2.13]	9.5 [0.37]	33 [1.30]	63 [2.48]	62 [2.44]	6 [0.24]	10 [0.39]	15 [0.59]	14 [0.55]
100 [4"]	G ¼ B	80 [3.15]	15.5 [0.61]	49.5 [1.95]	101 [3.98]	99 [3.90]	6.5 [0.26]	14.5 [0.57]	22.5 [0.89]	22 [0.87]
	G ½ B	87 [3.43]	15.5 [0.61]	49.5 [1.95]	101 [3.98]	99 [3.90]	6.5 [0.26]	14.5 [0.57]	22.5 [0.89]	22 [0.87]
	M12 x 1.5	80 [3.15]	15.5 [0.61]	49.5 [1.95]	101 [3.98]	99 [3.90]	6.5 [0.26]	14.5 [0.57]	22.5 [0.89]	22 [0.87]
	M20 x 1.5	87 [3.43]	15.5 [0.61]	49.5 [1.95]	101 [3.98]	99 [3.90]	6.5 [0.26]	14.5 [0.57]	22.5 [0.89]	22 [0.87]
160 [6"]	G ¼ B	111 [4.37]	15.5 [0.61]	51.5 [2.03] 1)	161 [6.34]	159 [6.26]	6.5 [0.26]	14.5 [0.57]	22.5 [0.89]	22 [0.87]
	G ½ B	118 [4.65]	15.5 [0.61]	51.5 [2.03] 1)	161 [6.34]	159 [6.26]	6.5 [0.26]	14.5 [0.57]	22.5 [0.89]	22 [0.87]
	M12 x 1.5	111 [4.37]	15.5 [0.61]	51.5 [2.03] 1)	161 [6.34]	159 [6.26]	6.5 [0.26]	14.5 [0.57]	22.5 [0.89]	22 [0.87]
	M20 x 1.5	118 [4.65]	15.5 [0.61]	51.5 [2.03] 1)	161 [6.34]	159 [6.26]	6.5 [0.26]	14.5 [0.57]	22.5 [0.89]	22 [0.87]

Process connection with thread per ISO 7

NS	G	Dimensions in mm [in]								
		h ±1	a	b	D1	D2	i	j	k	SW
63 [2 ½"]	R ¼	54 [2.13]	9.5 [0.37]	33 [1.30]	63 [2.48]	62 [2.44]	6 [0.24]	10 [0.39]	15 [0.59]	14 [0.55]
100 [4"]	R ¼	80 [3.15]	15.5 [0.61]	49.5 [1.95]	101 [3.98]	99 [3.90]	6.5 [0.26]	14.5 [0.57]	22.5 [0.89]	22 [0.87]
	R ½	86 [3.39]	15.5 [0.61]	49.5 [1.95]	101 [3.98]	99 [3.90]	6.5 [0.26]	14.5 [0.57]	22.5 [0.89]	22 [0.87]
160 [6"]	R ¼	111 [4.37]	15.5 [0.61]	51.5 [2.03] 1)	161 [6.34]	159 [6.26]	6.5 [0.26]	14.5 [0.57]	22.5 [0.89]	22 [0.87]
	R ½	117 [4.60]	15.5 [0.61]	51.5 [2.03] 1)	161 [6.34]	159 [6.26]	6.5 [0.26]	14.5 [0.57]	22.5 [0.89]	22 [0.87]

Process connection with thread per ANSI/B1.20.1

NS	G	Dimensions in mm [in]								
		h ±1	a	b	D1	D2	i	j	k	SW
63 [2 ½"]	¼ NPT	54 [2.13]	9.5 [0.37]	33 [1.30]	63 [2.48]	62 [2.44]	6 [0.24]	10 [0.39]	15 [0.59]	14 [0.55]
	⅛ NPT	51 [2.01]	9.5 [0.37]	33 [1.30]	63 [2.48]	62 [2.44]	6 [0.24]	10 [0.39]	15 [0.59]	14 [0.55]
100 [4"]	¼ NPT	80 [3.15]	15.5 [0.61]	49.5 [1.95]	101 [3.98]	99 [3.90]	6.5 [0.26]	14.5 [0.57]	22.5 [0.89]	22 [0.87]
	½ NPT	86 [3.39]	15.5 [0.61]	49.5 [1.95]	101 [3.98]	99 [3.90]	6.5 [0.26]	14.5 [0.57]	22.5 [0.89]	22 [0.87]
160 [6"]	¼ NPT	111 [4.37]	15.5 [0.61]	51.5 [2.03] 1)	161 [6.34]	159 [6.26]	6.5 [0.26]	14.5 [0.57]	22.5 [0.89]	22 [0.87]
	½ NPT	117 [4.60]	15.5 [0.61]	51.5 [2.03] 1)	161 [6.34]	159 [6.26]	6.5 [0.26]	14.5 [0.57]	22.5 [0.89]	22 [0.87]

1) Plus 16 mm [0.630 in] with scale range 0 ... 1,600 bar [0 ... 20,000 psi]

Lower back mount

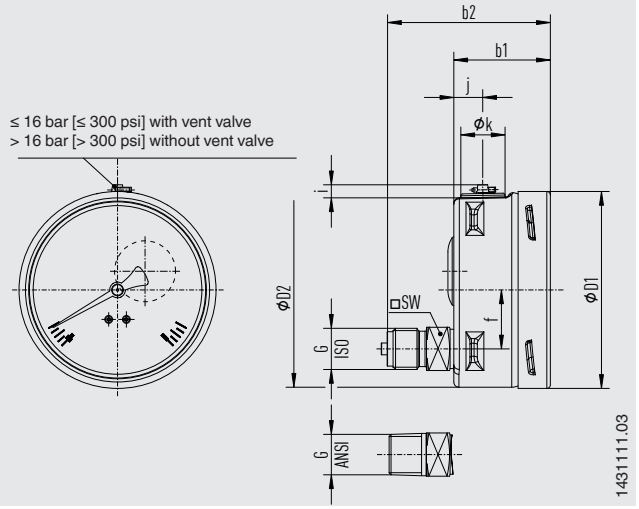

NS	Weight	
	Model 232.50	Model 233.50
63 [2 ½"]	approx. 0.16 kg [0.35 lbs]	approx. 0.20 kg [0.44 lbs]
100 [4"]	approx. 0.6 kg [1.32 lbs]	approx. 0.9 kg [1.98 lbs]
160 [6"]	approx. 1.1 kg [2.43 lbs]	approx. 2.0 kg [4.41 lbs]

Process connection with thread per EN 837-1

NS	G	Dimensions in mm [in]								
		b1	b2 ±1	D1	D2	e	i	j	k	SW
63 [2 ½"]	G ¼ B	33 [1.30]	57 [2.24]	63 [2.48]	62 [2.44]	18.5 [0.73]	6 [0.24]	10 [0.39]	15 [0.59]	14 [0.55]
	G ⅛ B	33 [1.30]	54 [2.13]	63 [2.48]	62 [2.44]	18.5 [0.73]	6 [0.24]	10 [0.39]	15 [0.59]	14 [0.55]
	M12 x 1.5	33 [1.30]	57 [2.24]	63 [2.48]	62 [2.44]	18.5 [0.73]	6 [0.24]	10 [0.39]	15 [0.59]	14 [0.55]
100 [4"]	G ¼ B	49.5 [1.95]	76 [2.99]	101 [3.98]	99 [3.90]	30 [1.181]	6.5 [0.26]	14.5 [0.57]	22.5 [0.89]	22 [0.87]
	G ½ B	49.5 [1.95]	83 [3.27]	101 [3.98]	99 [3.90]	30 [1.181]	6.5 [0.26]	14.5 [0.57]	22.5 [0.89]	22 [0.87]
	M12 x 1.5	49.5 [1.95]	76 [2.99]	101 [3.98]	99 [3.90]	30 [1.181]	6.5 [0.26]	14.5 [0.57]	22.5 [0.89]	22 [0.87]
	M20 x 1.5	49.5 [1.95]	83 [3.27]	101 [3.98]	99 [3.90]	30 [1.181]	6.5 [0.26]	14.5 [0.57]	22.5 [0.89]	22 [0.87]
160 [6"]	G ¼ B	51.5 [2.03] 1)	78 [3.07] 1)	161 [6.34]	159 [6.26]	50 [1.97]	6.5 [0.26]	14.5 [0.57]	22.5 [0.89]	22 [0.87]
	G ½ B	51.5 [2.03] 1)	85 [3.24] 1)	161 [6.34]	159 [6.26]	50 [1.97]	6.5 [0.26]	14.5 [0.57]	22.5 [0.89]	22 [0.87]
	M12 x 1.5	51.5 [2.03] 1)	78 [3.07] 1)	161 [6.34]	159 [6.26]	50 [1.97]	6.5 [0.26]	14.5 [0.57]	22.5 [0.89]	22 [0.87]
	M20 x 1.5	51.5 [2.03] 1)	85 [3.24] 1)	161 [6.34]	159 [6.26]	50 [1.97]	6.5 [0.26]	14.5 [0.57]	22.5 [0.89]	22 [0.87]

Process connection with thread per ISO 7

NS	G	Dimensions in mm [in]								
		b1	b2 ±1	D1	D2	e	i	j	k	SW
63 [2 ½"]	R ¼	33 [1.30]	57 [2.24]	63 [2.48]	62 [2.44]	18.5 [0.73]	6 [0.24]	10 [0.39]	15 [0.59]	14 [0.55]
100 [4"]	R ¼	49.5 [1.95]	76 [2.99]	101 [3.98]	99 [3.90]	30 [1.181]	6.5 [0.26]	14.5 [0.57]	22.5 [0.89]	22 [0.87]
	R ½	49.5 [1.95]	82 [3.23]	101 [3.98]	99 [3.90]	30 [1.181]	6.5 [0.26]	14.5 [0.57]	22.5 [0.89]	22 [0.87]
160 [6"]	R ¼	51.5 [2.03] 1)	78 [3.07] 1)	161 [6.34]	159 [6.26]	50 [1.97]	6.5 [0.26]	14.5 [0.57]	22.5 [0.89]	22 [0.87]
	R ½	51.5 [2.03] 1)	84 [3.31] 1)	161 [6.34]	159 [6.26]	50 [1.97]	6.5 [0.26]	14.5 [0.57]	22.5 [0.89]	22 [0.87]

Process connection with thread per ANSI/B1.20.1

NS	G	Dimensions in mm [in]								
		b1	b2 ±1	D1	D2	e	i	j	k	SW
63 [2 ½"]	¼ NPT	33 [1.30]	57 [2.24]	63 [2.48]	62 [2.44]	50 [1.97]	6 [0.24]	10 [0.39]	15 [0.59]	14 [0.55]
	⅛ NPT	33 [1.30]	54 [2.13]	63 [2.48]	62 [2.44]	50 [1.97]	6 [0.24]	10 [0.39]	15 [0.59]	14 [0.55]
100 [4"]	¼ NPT	49.5 [1.95]	76 [2.99]	101 [3.98]	99 [3.90]	50 [1.97]	6.5 [0.26]	14.5 [0.57]	22.5 [0.89]	22 [0.87]
	½ NPT	49.5 [1.95]	82 [3.23]	101 [3.98]	99 [3.90]	50 [1.97]	6.5 [0.26]	14.5 [0.57]	22.5 [0.89]	22 [0.87]
160 [6"]	¼ NPT	51.5 [2.03] 1)	78 [3.07] 1)	161 [6.34]	159 [6.26]	50 [1.97]	6.5 [0.26]	14.5 [0.57]	22.5 [0.89]	22 [0.87]
	½ NPT	51.5 [2.03] 1)	84 [3.31] 1)	161 [6.34]	159 [6.26]	50 [1.97]	6.5 [0.26]	14.5 [0.57]	22.5 [0.89]	22 [0.87]

1) Plus 16 mm [0.630 in] with scale ranges ≥ 0 ... 100 bar [≥ 0 ... 1,500 psi]

NS 63 [2 ½"], centre back mount

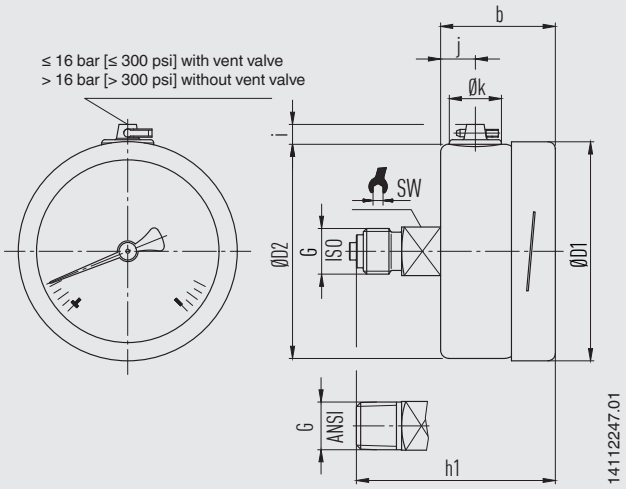

NS	Weight	
	Model 232.50	Model 233.50
63 [2 ½"]	approx. 0.16 kg [0.35 lbs]	approx. 0.20 kg [0.44 lbs]

Process connection with thread per EN 837-1

NS	G	Dimensions in mm [in]							
		h ±1	b	D1	D2	i	j	k	SW
63 [2 ½"]	G ¼ B	57 [2.24]	33 [1.30]	63 [2.48]	62 [2.44]	6 [0.24]	10 [0.39]	15 [0.59]	14 [0.55]
	G ⅛ B	54 [2.13]	33 [1.30]	63 [2.48]	62 [2.44]	6 [0.24]	10 [0.39]	15 [0.59]	14 [0.55]
	M12 x 1.5	57 [2.24]	33 [1.30]	63 [2.48]	62 [2.44]	6 [0.24]	10 [0.39]	15 [0.59]	14 [0.55]

Process connection with thread per ISO 7

NS	G	Dimensions in mm [in]							
		h ±1	b	D1	D2	i	j	k	SW
63 [2 ½"]	R ¼	57 [2.24]	33 [1.30]	63 [2.48]	62 [2.44]	6 [0.24]	10 [0.39]	15 [0.59]	14 [0.55]

Process connection with thread per ANSI/B1.20.1

NS	G	Dimensions in mm [in]							
		h ±1	b	D1	D2	i	j	k	SW
63 [2 ½"]	¼ NPT	57 [2.24]	33 [1.30]	63 [2.48]	62 [2.44]	6 [0.24]	10 [0.39]	15 [0.59]	14 [0.55]
	⅛ NPT	54 [2.13]	33 [1.30]	63 [2.48]	62 [2.44]	6 [0.24]	10 [0.39]	15 [0.59]	14 [0.55]

Accessories

Dimensions in mm [in]

Panel mounting flange

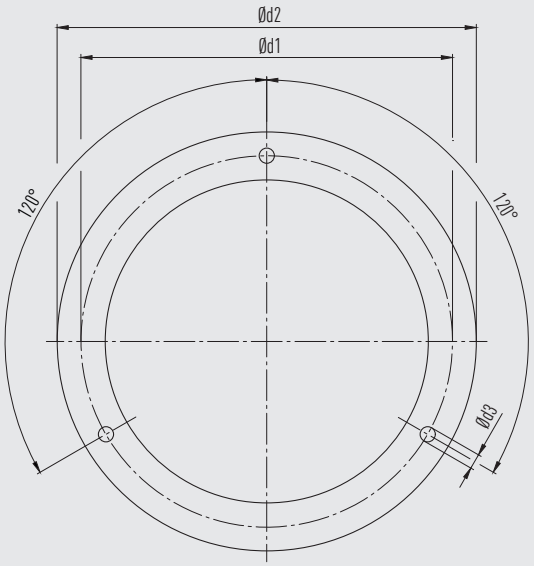

Surface mounting flange

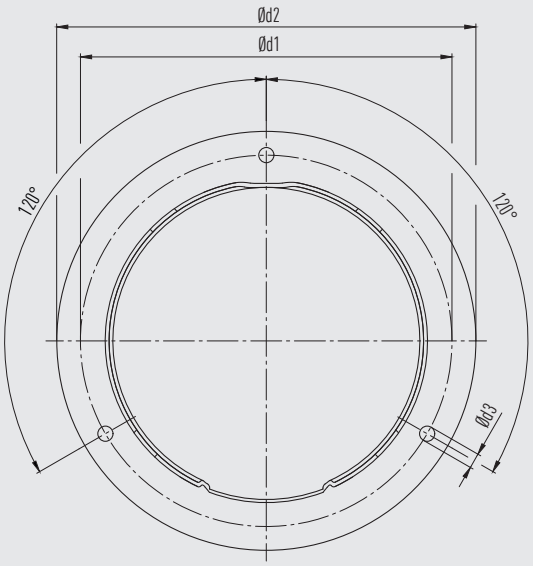

NS	Dimensions in mm [in]			
	Recommended panel cutout	d1	d2	d3
63 [2 ½"]	Ø 67 ±0.3 / Ø 2.6 [Ø 2.64 ±0.01 / Ø 0.10]	75 [2.95]	85 [3.35]	3.6 [0.14]
100 [4"]	Ø 104 ±0.5 / Ø 4.1 [Ø 4.04 ±0.02 / Ø 0.16]	117 [4.60]	132 [5.20]	4.8 [0.19]
160 [6"]	Ø 164 ±0.5 / Ø 6.5 [Ø 6.46 ±0.02 / Ø 0.26]	178 [7.01]	196 [7.72]	5.8 [0.23]

Triangular profile ring

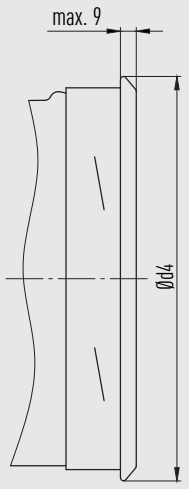

NS	Dimensions in mm [in]	
	Recommended panel cutout	d4
63 [2 ½"]	Ø 64.5 ±0.5 / Ø 2.5 [Ø 2.54 ±0.02 / Ø 0.01]	≤ 69 [2.72]
NS 100 [4"]	Ø 102 ±1.0 / Ø 4.0 [Ø 4.02 ±0.04 / Ø 0.16]	≤ 108 [4.25]
NS 160 [6"]	Ø 162.6 ±1.0 / Ø 6.4 [Ø 6.40 ±0.04 / Ø 0.25]	≤ 168 [6.61]

Accessories and spare parts

Model		Description
	**910.17**	Seals → see data sheet AC 09.08
	**910.15**	Syphons → see data sheet AC 09.06
	**910.13**	Overpressure protector → see data sheet AC 09.04
	**IV10, IV11**	Needle valve and multiport valve → see data sheet AC 09.22
	**IV20, IV21**	Block-and-bleed valve → see data sheet AC 09.19
	**IVM**	Monoflange, process and instrument version → see data sheet AC 09.17
	**BV**	Ball valve, process and instrument version → see data sheet AC 09.28
	**IBF2, IBF3**	Monoblock with flange connection → see data sheet AC 09.25

Ordering information

Model / Nominal size / Scale range / Process connection / Connection location / Options

© 02/1995 WIKA Alexander Wiegand SE & Co. KG, all rights reserved.
The specifications given in this document represent the state of engineering at the time of publishing.
We reserve the right to make modifications to the specifications and materials.
In case of a different interpretation of the translated and the English data sheet, the English wording shall prevail.

WIKA Alexander Wiegand SE & Co. KG
Alexander-Wiegand-Straße 30
63911 Klingenberg/Germany
Tel. +49 9372 132-0
info@wika.de
www.wika.de