23130-165 VARISTAR TOP COVER FAN, HEIGHT 38 MM, 162 M³/H



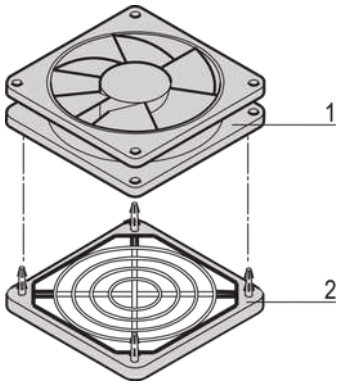

KEY FEATURES

Varistar Top Cover Fan, Height 38 mm, 162 m³/h

PRODUCT ATTRIBUTES

Product Type: Fan
Product Family: Varistar
Works With: Varistar CP
Voltage AC: 230 V
Depth: 119 mm
Frequency: 50 Hz; 60 Hz
Airflow @ 50 Hz: 162 m³/h
Airflow @ 60 Hz: 192 m³/h
Noise Level @ 50 Hz: 37 dB(A)
Power @ 50 Hz: 15 W
Power @ 60 Hz: 14 W
Max Static Pressure @ 50 Hz: 73 Pa
Max Static Pressure @ 60 Hz: 88 Pa
Ambient Temperature: 70 °C
Height: 38 mm
Width: 119 mm

ADDITIONAL PRODUCT DETAILS

Top covers with fans are compact active cooling units which do not consume rack space. The Varistar fan for top cover comes with high specifications.

CERTIFICATIONS





North America
All locations
+1.763.422.2661
Chat with us:
schroff.nvent.com

Europe
Straubenhardt, Germany
+49.7082.794.0
Betschdorf, France
+33.3.88.90.64.90
Warsaw, Poland
+48.22.209.98.35
Assago, Italy
+39.02.932.7141
Chat with us:
schroff.nvent.com

Asia
Shanghai, China
+86.21.2412.6943
Qingdao, China
+86.532.8771.6101
Singapore
+65.6768.5800
Shin-Yokohama, Japan
+81.45.476.0271
Chat with us:
schroff.nvent.com

Middle East & India
Dubai, United Arab Emirates
+971.4.378.1700
Bangalore, India
+91.80.6715.2001
Istanbul, Turkey
+90.216.250.7374
Chat with us:
schroff.nvent.com

nVent

Our powerful portfolio of brands:
nVent.com CADDY ERICO HOFFMAN RAYCHEM SCHROFF TRACER

© 2023 nVent. All nVent marks and logos are owned or licensed by nVent Services GmbH or its affiliates. All other trademarks are the property of their respective owners.

nVent reserves the right to change specifications without notice.