E10021

Hexagon nut

NUT M8X1 BRASS 2 PIECES

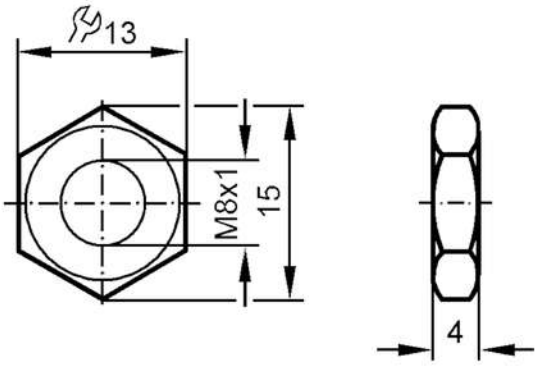

Mechanical data		
Weight	[g]	7.6
Dimensions	[mm]	M8 x 1
Thread designation		M8 x 1
Materials		brass nickel-plated
Remarks		
Pack quantity		2 pcs.