

Image may differ from product. See technical specification for details.

K 30X35X27

Single row needle roller and cage assembly

Needle roller and cage assemblies are self-contained, ready-to-mount bearings without inner and outer rings. In applications where the shaft and housing bore can serve as raceways, the assemblies can be used to create bearing arrangements that require minimal radial space. As the clearance of the bearing arrangement is only affected by the roller sorting and the finish of shaft and housing, very precise bearing arrangements can be achieved.

- High radial load carrying capacity
- High stiffness
- High precision
- Lowest cross-sectional height among rolling bearings
- Accommodate axial displacement in both directions

Overview

Dimensions

Bore diameter of needle roller complement	30 mm
Outside diameter	35 mm
Outside diameter of needle roller complement	35 mm
Width	27 mm

Performance

Basic dynamic load rating	29.2 kN
Basic static load rating	60 kN
Reference speed	13 000 r/min
Limiting speed	15 000 r/min

Properties

Bearing part	Needle roller and cage assembly
Number of rows	1
Outer ring type	Not applicable
Aligning feature	Without
Cage	Sheet steel
Tolerance class	Normal
Material, bearing	Bearing steel
Coating	Without
Sealing	Without
Lubricant	None
Relubrication feature	Without

Logistics

Product net weight	0.03 kg
eClass code	23-05-09-03
UNSPSC code	31171512

Technical specification

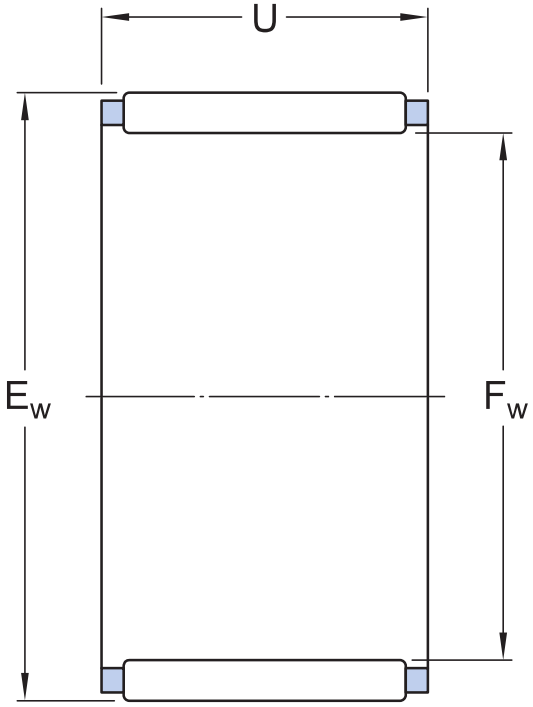

Dimensions

F_w	30 mm	Diameter under rollers
E_w	35 mm	Outside diameter roller complement
U	27 mm	Width needle roller and cage assembly

Calculation data

Basic dynamic load rating	C	29.2 kN
Basic static load rating	C_0	60 kN
Fatigue load limit	P_u	7.35 kN
Reference speed		13 000 r/min
Limiting speed		15 000 r/min

Tolerances and clearances

GENERAL BEARING SPECIFICATIONS

- Tolerances: gauges
- Radial internal clearance

DESIGN CONSIDERATIONS

- Shaft and housing tolerances

More Information

Product details

- Designs and variants
- General bearing specifications
- Loads
- Temperature limits
- Permissible speed
- Design considerations
- Designation system

Engineering information

- Principles of rolling bearing selection
- General bearing knowledge
- Bearing selection process
- Bearing failure and how to prevent it

Tools

- SimPro Quick
- Bearing Select
- Engineering Calculator
- LubeSelect for SKF greases
- Heater Selection Tool

Terms of use

By accessing and using this website / app owned and published by AB SKF (publ.) (556007-3495 · Gothenburg) (“SKF”), you agree to the following terms and conditions:

Warranty Disclaimer and Limitation of Liability
Although every care has been taken to assure the accuracy of the information on this website / app, SKF provides this information "AS IS" and DISCLAIMS ALL WARRANTIES, EXPRESS OR IMPLIED, INCLUDING, BUT NOT LIMITED TO, IMPLIED WARRANTIES OF MERCHANTABILITY AND FITNESS FOR A PARTICULAR PURPOSE. You acknowledge that your use of this website / app is at your sole risk, that you assume full responsibility for all costs associated with use of this website / app, and that SKF shall not be liable for any direct, incidental, consequential, or indirect damages of any kind arising out of your access to, or use of the information or software made available on this website / app.

Any warranties and representations in this website / app for SKF products or services that you purchase or use will be subject to the agreed upon terms and conditions in the contract for such product or service.

Further, for non-SKF websites / apps that are referenced in our website / app or where a hyperlink appears, SKF makes no warranties concerning the accuracy or reliability of the information in these websites / apps and assumes no responsibility for material created or published by third parties contained therein. In addition, SKF does not warrant that this website / app or these other linked websites / apps are free from viruses or other harmful elements.

Third Party Services
When viewing YouTube content via the SKF website(s) (i.e. using YouTube API Services), you agree to be bound by the YouTube Terms of Service.

Copyright
Copyright in this website / app copyright of the information and software made available on this website / app rest with SKF or its licensors. All rights are reserved. All licensed material will reference the licensor that has granted SKF the right to use the material. The information and software made available on this website / app may not be reproduced, duplicated, copied, transferred, distributed, stored, modified, downloaded or otherwise exploited for any commercial use without the prior written approval of SKF. However, it may be reproduced, stored and downloaded for use by individuals without prior written approval of SKF. Under no circumstances may this information or software be supplied to third parties.

This website /app includes certain images used under license from Shutterstock, Inc.

Trademarks and Patents
All trademarks, brand names, and corporate logos displayed on the website / app are the property of SKF or its licensors, and may not be used in any way without prior written approval by SKF. All licensed trademarks published on this website / app reference the licensor that has granted SKF the right to use the trademark. Access to this website / app does not grant to the user any license under any patents owned by or licensed to SKF.

Changes
SKF reserves the right to make changes or additions to this website / app at any time.