Differential pressure sensor
For ventilation and air-conditioning
Model A2G-50

for further approvals
see page 4

Applications

- For measuring differential pressures and static pressures
- Monitoring of filters
- Overpressure monitoring in clean rooms and laboratories

Special features

- Electrical output signal 0 … 10 V or 4 … 20 mA
- Modbus® output signal
- LC display
- Maintenance-free
- Maximum operating pressure 20 kPa



Differential pressure sensor, model A2G-50

Description

The model A2G-50 differential pressure sensor is used for measuring differential pressures of gaseous media in ventilation and air-conditioning applications.

It is based on the piezoresistive measurement principle. This compact differential pressure sensor offers excellent performance and high quality at an attractive price.

Electrical analogue output signals for both measurands (0 … 10 V or 4 … 20 mA) or the digital Modbus® versions enable the direct connection to control systems or the building automation system.

The pressure range as well as the unit and the response time can be individually adapted in the instrument via jumpers.

The measured differential pressure is also shown on the LC display and transmitted via the analogue or digital output signals. The LC display and the clear menu navigation enable a time-saving and simple commissioning.

Data sheets showing similar products:
Differential pressure sensor, eco version; model A2G-55; see data sheet PE 88.04

WIKA
Part of your business

Specifications

Differential pressure sensor, model A2G-50				
Version	■ Version without LC display ■ Version with LC display			
Measuring element	Piezo measuring cell			
Measuring range [1]	**Variant 1**	**Variant 2**	**Variant 3**	**Variant 4**
	0 … 2,500 Pa 0 … 2,000 Pa 0 … 1,500 Pa 0 … 1,000 Pa 0 … 500 Pa 0 … 250 Pa 0 … 100 Pa -100 … +100 Pa	0 … 7,000 Pa 0 … 5,000 Pa 0 … 4,000 Pa 0 … 3,000 Pa 0 … 2,500 Pa 0 … 2,000 Pa 0 … 1,500 Pa 0 … 1,000 Pa	-250 … +250 Pa -100 … +100 Pa -50 … +50 Pa -25 … +25 Pa 0 … 250 Pa 0 … 100 Pa 0 … 50 Pa 0 … 25 Pa	0 … 12,000 Pa 0 … 10,000 Pa 0 … 9,000 Pa 0 … 8,000 Pa 0 … 7,500 Pa 0 … 7,000 Pa -1,000 … +1,000 Pa -500 … +500 Pa
Accuracy [2]				
Measuring ranges 0 … 250, 0 … 2,500 Pa	Pressure < 125 Pa	1 % ±2 Pa		
	Pressure > 125 Pa	1 % ±1 Pa		
Measuring ranges 0 … 7,000, 0 … 12,000 Pa	Pressure < 125 Pa	1.5 % ±2 Pa		
	Pressure > 125 Pa	1.5 % ±1 Pa		
Output accuracy [3]	Voltage	±0.025 V at 25 °C		
	Current	±0.04 mA typical, at 25 °C, load 100 Ω ±0.1 mA max, az 25 °C, load 20 ... 500 Ω		
Units (adjustable in the menu)	■ Pa ■ kPa ■ mbar ■ inWC ■ mmWC			
Process connection	Connecting nozzle (ABS), lower mount, for hoses with inner diameter 4 … 6 mm			
Supply voltage U_B				
With automatic zero point setting	AC 24 V or DC 24 V ±10 %			
Without automatic zero point setting	Output signal 0 ... 10 V		DC 14 … 30 V or AC 24 V ±10 %	
	Output signal 4 … 20 mA		DC 9 … 30 V or AC 24 V ±10 %	
Electrical connection	Cable gland M16 Screw terminals max. 1.5 mm²			
Output signal	■ DC 0 … 10 V, 3-wire ■ 4 … 20 mA, 3-wire ■ Modbus®			
Current consumption				
DC 0 … 10 V	< 1.0 W			
4 … 20 mA	< 1.2 W			
Modbus®	< 1.3 W			
Case	Plastic (ABS)			
Zero point setting	■ Automatic [4] ■ Manually via push button on the printed circuit board			
Permissible temperatures				
Medium	■ -20 … +50 °C [-4 … +122 °F] ■ -5 … +50 °C [23 … 122 °F], with automatic zero point setting			
Ambient	-40 … +70 °C [-40 … +158 °F]			
Ingress protection per IEC/EN 60529	IP54			
Weight	150 g			

1) The measuring range is set via jumpers within the selected variant.
2) All data refer to the current measured pressure.
3) After an half-hour warm-up time.
4) Recommended for measuring ranges < 250 Pa

Modbus® version

Modbus® communication	
Protocol	Modbus® via serial interface
Measuring range	■ -250 … +2,500 Pa ■ -250 … +7,000 Pa
Transfer mode	RTU
Interface	RS-485
Byte format	(11 bits) in RTU mode Coding system: 8 bits binary
	Bits per byte: ■ 1 start bit ■ 8 data bits, lowest-order bit is sent first ■ 1 bit for parity ■ 1 stop bit
Baud rate	■ 9,600 ■ 19,200 ■ 38,400 Adjustable in the configuration
Modbus® addresses	1 … 247 addresses selectable in the configuration menu

Automatic zero point setting

The automatic zero point setting aligns the zero point from time to time so that a manual zero point setting is not necessary.
During the zero point setting (3 seconds every 10 minutes), the output signal and the digital display show the last measured value.

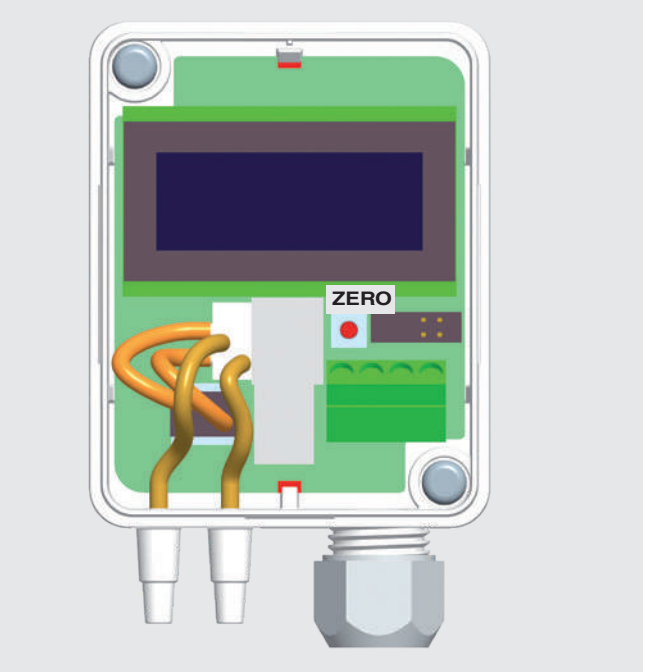

Approvals

Logo	Description	Region
CE	**EU declaration of conformity**	European Union
	EMC directive	
	RoHS directive	

Optional approvals

Logo	Description	Region
EAC	**EAC**	Eurasian Economic Community
	EMC directive	
	PAC Russia Metrology, measurement technology	Russia
	PAC Kazakhstan Metrology, measurement technology	Kazakhstan
-	**MChS** Permission for commissioning	Kazakhstan
	PAC Belarus Metrology, measurement technology	Belarus
-	**PAC Ukraine** Metrology, measurement technology	Ukraine

Certificates (option)

Certificates	
Certificates	■ Measurement report per EN 837 ■ 2.2 test report per EN 10204 (e.g. state-of-the-art manufacturing, material proof, indication accuracy) ■ 3.1 inspection certificate per EN 10204 (e.g. material proof for wetted metal parts, indication accuracy, calibration certificate)

Approvals and certificates, see website

Electrical connection

Output signal DC 0 … 10 V

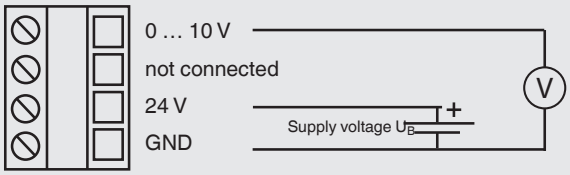

Output signal 4 … 20 mA

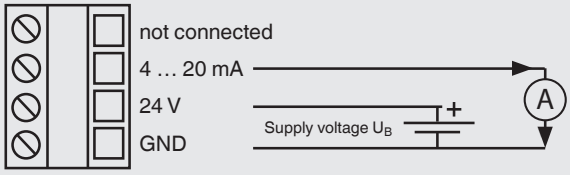

Modbus® output signal

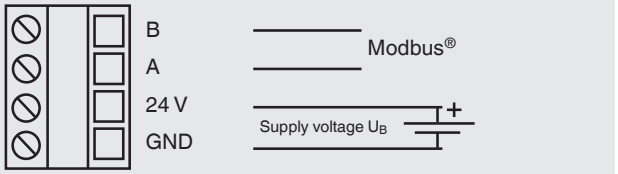

Dimensions in mm

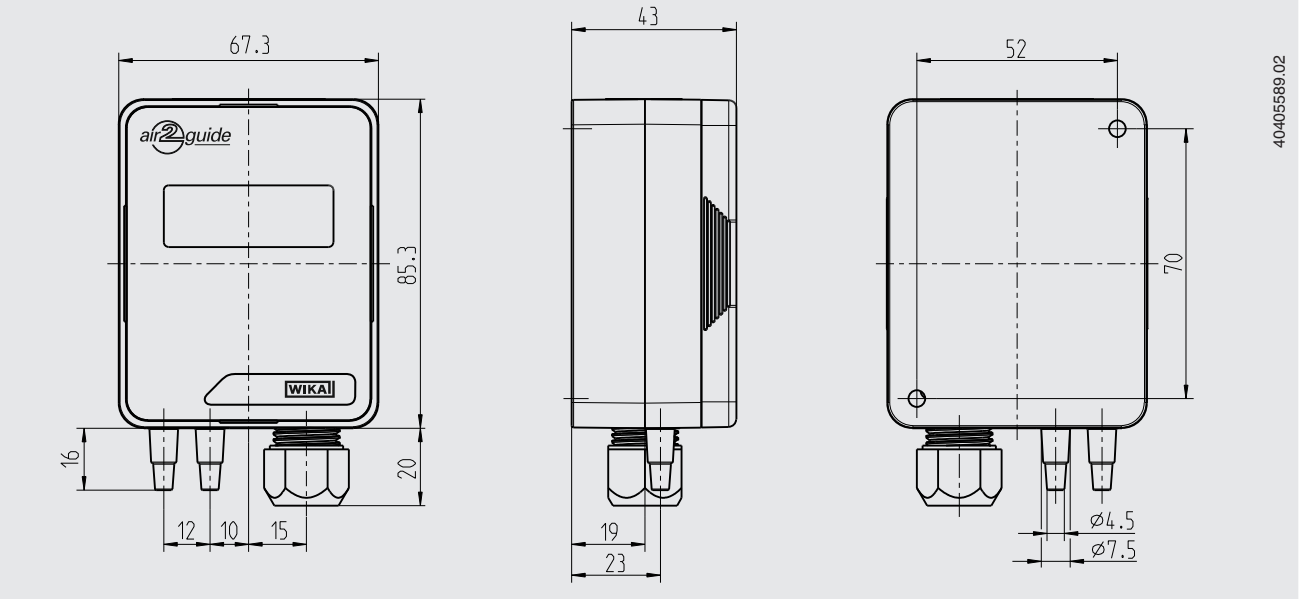

Accessories

Description		Order number
	**Static duct probes with combi hose connection for pressure measuring hoses Ø 4 … 7 mm**	
	Insertion length 100 mm	40232981
	Insertion length 150 mm	40232999
	Insertion length 200 mm	40233006
	**Measuring hoses**	
	PVC hose, inner diameter 4 mm, roll at 25 m	40217841
	PVC hose, inner diameter 6 mm, roll at 25 m	40217850
	Silicone hose, inner diameter 4 mm, roll at 25 m	40208940
	Silicone hose, inner diameter 6 mm, roll at 25 m	40208958
	**Duct connectors for measuring hoses Ø 4 … 6 mm**	40217507

Ordering information

Model / Version / Measuring range / Output signal / Zero point setting / Accessories / Approvals / Certificates / Options

© 08/2008 WIKA Alexander Wiegand SE & Co. KG, all rights reserved.
The specifications given in this document represent the state of engineering at the time of publishing.
We reserve the right to make modifications to the specifications and materials.

WIKA Alexander Wiegand SE & Co. KG
Alexander-Wiegand-Straße 30
63911 Klingenberg/Germany
Tel. +49 9372 132-0
Fax +49 9372 132-406
info@wika.de
www.wika.de