IFM214

Inductive sensor

IFK3004BANKG/M/0,2M/DTM06

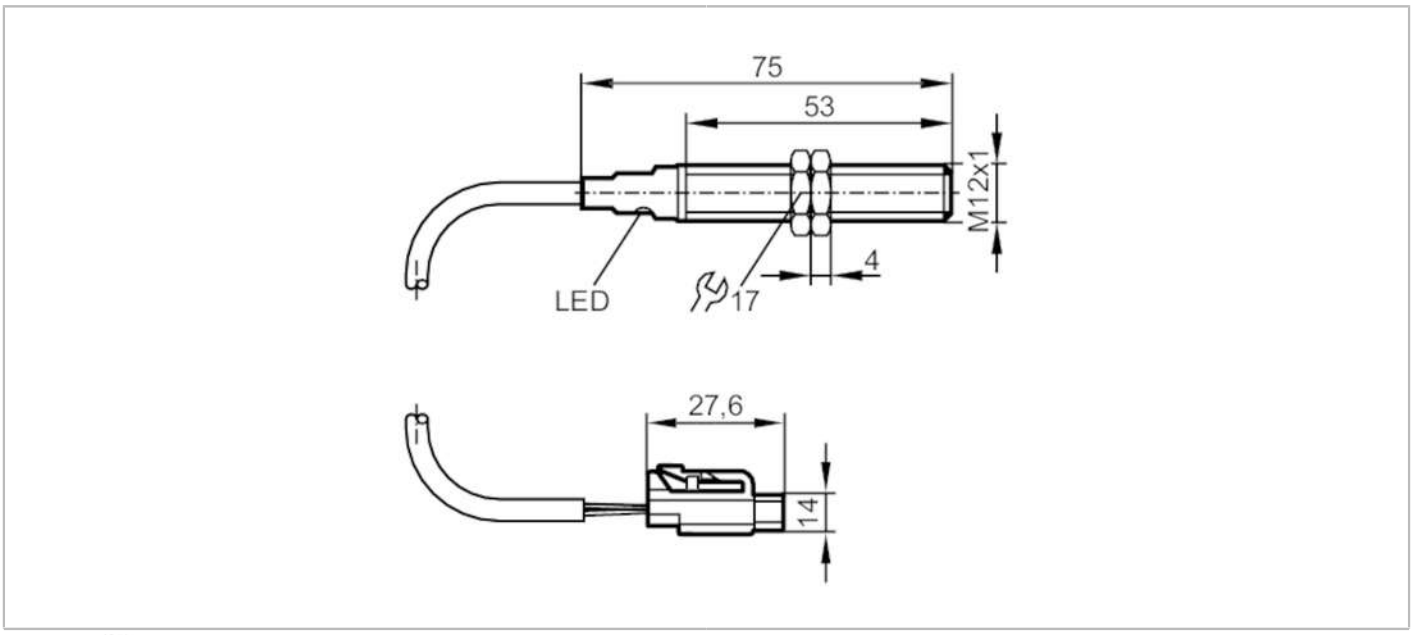

Product characteristics		
Electrical design		NPN
Output function		normally open
Sensing range	[mm]	4
Housing		threaded type
Dimensions	[mm]	M12 x 1 / L = 75
Application		
Special feature		Increased sensing range
Application		Use in mobile and harsh applications
Electrical data		
Operating voltage	[V]	10...36 DC
Current consumption	[mA]	< 10
Protection class		II
Reverse polarity protection		yes
Outputs		
Electrical design		NPN
Output function		normally open
Max. voltage drop switching output DC	[V]	2.5
Max. leakage current	[mA]	0.5
Permanent current rating of switching output DC	[mA]	300
Switching frequency DC	[Hz]	400
Short-circuit protection		yes
Type of short-circuit protection		pulsed
Overload protection		yes

IFM214

Inductive sensor

IFK3004BANKG/M/0,2M/DTM06

Detection zone			
Sensing range	[mm]	4	
Operating distance	[mm]	0...3.24	
Increased sensing range		yes	
Accuracy / deviations			
Correction factor		steel: 1 / stainless steel: 0.7 / brass: 0.5 / aluminium: 0.5 / copper: 0.4	
Hysteresis	[% of Sr]	1...20	
Operating conditions			
Ambient temperature	[°C]	-40...85	
Protection		IP 67; IP 69K	
Tests / approvals			
EMC		automotive area	
		noise emission and noise interference according to the automotive directive 95/54/EC	
		noise immunity according to DIN ISO 11452-2	100 V/m
		conducted interference acc. to ISO 7637-2	
		pulse	1 2 3a 3b 4 5
		severity level	IV IV IV IV IV IV
		failure criterion	C C A A A C
		EN 61000-4-2 ESD	4 kV CD / 8 kV AD
		EN 61000-4-3 HF radiated	10 V/m
		EN 61000-4-4 Burst	2 kV
		EN 61000-4-5 Surge	0,5 kV mains line to line
		EN 61000-4-6 HF conducted	10 V
		EN 55011	class B
Vibration resistance		EN 60068-2-6 Fc	20 g (10...3000 Hz) / -20...50 °C
			50 sweep cycles, 1 octave per minute, in 3 axes
Shock resistance		EN 60068-2-27 Ea	100 g 11 ms half-sine; 3 shocks each in every direction of the 3 coordinate axes / -40...85 °C
Continuous shock resistance		EN 60068-2-27	40 g 6 ms; 4000 shocks each in every direction of the 3 coordinate axes / -20...50 °C
Fast temperature change		EN 60068-2-14 Na	TA = -40 °C; TB = 85 °C; t1 = 30 min; t2 = < 10 s; 50 cycles
Salt spray test		EN 60068-2-52 Kb	severity level 5 (4 test cycles)
MTTF	[years]	638	
Mechanical data			
Weight	[g]	44	
Housing		threaded type	
Mounting		flush mountable	
Dimensions	[mm]	M12 x 1 / L = 75	
Thread designation		M12 x 1	
Materials		housing: stainless steel; sensing face: LCP natural; LED window: PEI; lock nuts: brass	
Displays / operating elements			
Display		switching status	4 x 90° LED, yellow

IFM214

Inductive sensor

IFK3004BANKG/M/0,2M/DTM06

Accessories	
Items supplied	lock nuts: 2

Remarks	
Pack quantity	1 pcs.

Electrical connection - socket

Cable: 0.2 m, PUR; burning behaviour to ECE R118 rev. 2; 3 x 0.5 mm²

Connector: 1 x DEUTSCH connector ((DTM06-3S))

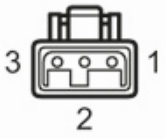

Connection

