

Push-button,conical,blue

Part no.	**M22-DH-B**
Article no.	**216649**
Catalog No.	**M22-DH-BQ**

Powering Business Worldwide

Delivery programme

Product range			RMQ-Titan (drilling dimensions 22.5 mm)
Basic function			Pushbutton actuators
Single unit/Complete unit			Single unit
Description			Actuator extended,
Function			momentary
Button plate			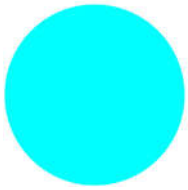
Front ring			Front ring: titanium
Connection to SmartWire-DT			yes
Function			momentary

Approvals

Product Standards	IEC/EN 60947-5; UL 508; CSA-C22.2 No. 14-05; CSA-C22.2 No. 94-91; CE marking
UL File No.	E29184
UL Category Control No.	NKCR
CSA File No.	012528
CSA Class No.	3211-03
North America Certification	UL listed, CSA certified
Degree of Protection	UL/CSA Type 3R, 4X, 12, 13

General

Standards			IEC/EN 60947 VDE 0660
Lifespan, mechanical	Operations	x 10^6	> 5
Operating frequency	Operations/h		3600
Actuating force		n	5
Protection type			IP67, IP69K
Climatic proofing			Damp heat, constant, to IEC 60068-2-78 Damp heat, cyclic, to IEC 60068-2-30
Ambient temperature		°C	
Open		°C	- 25 - + 70
Storage		°C	- 40 - + 80
Mounting position			As required
Mechanical shock resistance		g	30 Shock duration 11 ms Sinusoidal according to IEC 60068-2-27

Technical data ETIM 5.0

Low-voltage industrial components (EG000017) / Front element for push button (EC000221)
Electric engineering, automation, process control engineering / Low-voltage switch technology / Command and alarm device / Front element for push-button actuators (ecl@ss8-27-37-12-10 [AKF028010])

Colour button			Blue
Number of command positions			1
Construction type lens			Round
Hole diameter		mm	22
Width opening		mm	22
Height meter opening		mm	6
Degree of protection (IP), front side			IP67
Type of button			High

Suitable for illumination			No
Switching function latching			No
Spring-return			Yes
With front ring			Yes
Material front ring			Plastic
Colour front ring			Chrome

Dimensions

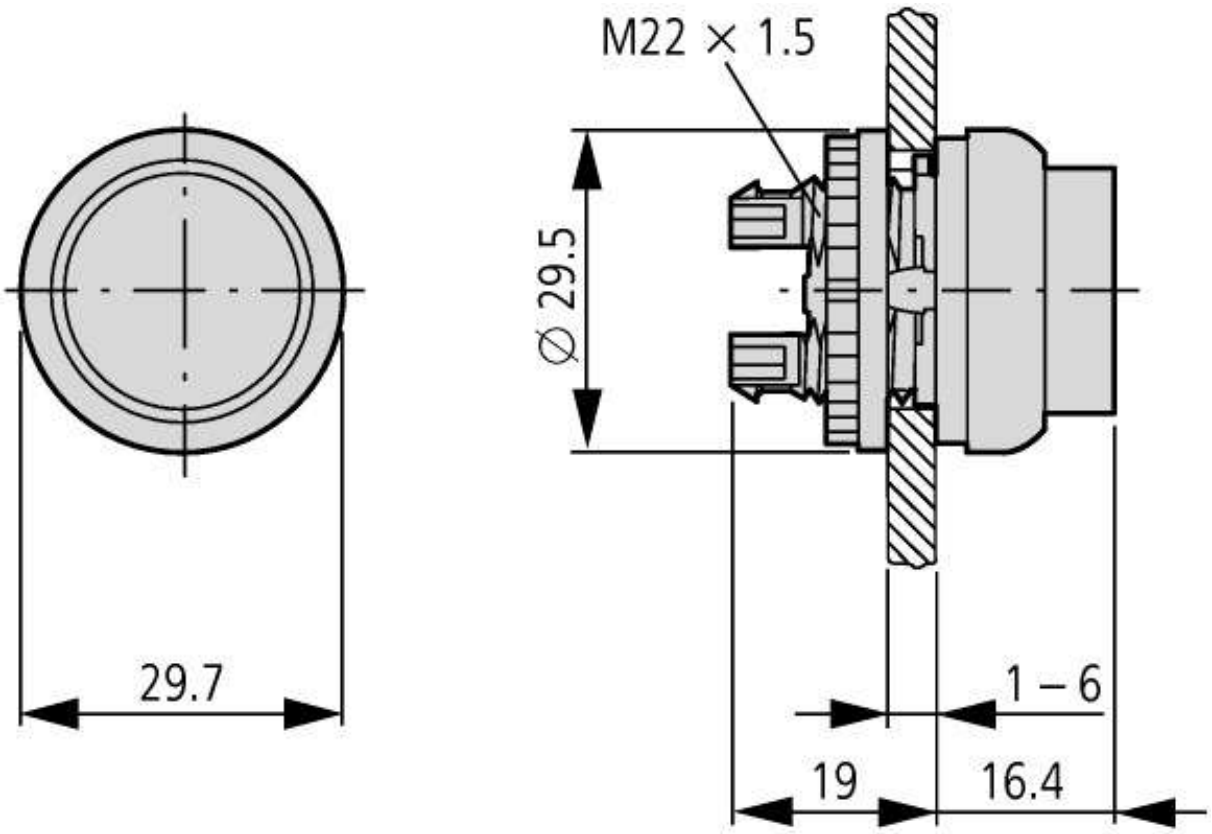

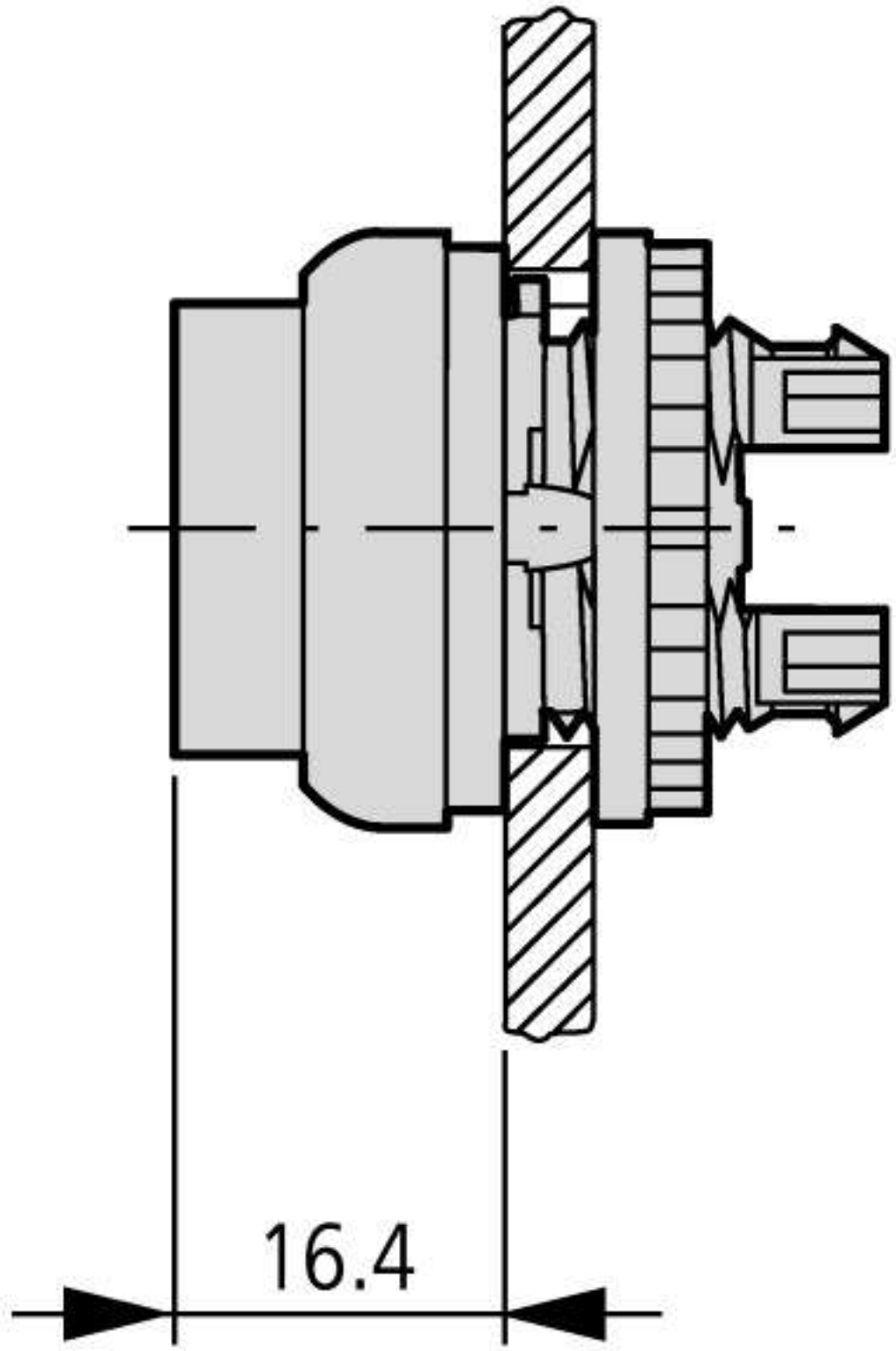

Additional product information (links)

IL04716002Z (AWA1160-1745) RMQ-Titan System	
IL04716002Z (AWA1160-1745) RMQ-Titan System	ftp://ftp.moeller.net/DOCUMENTATION/AWA_INSTRUCTIONS/IL04716002Z2013_08.pdf

© 11/2013 by Eaton Industries GmbH