O6S701

Through-beam sensor transmitter

O6SLOOKG/0,30m/US

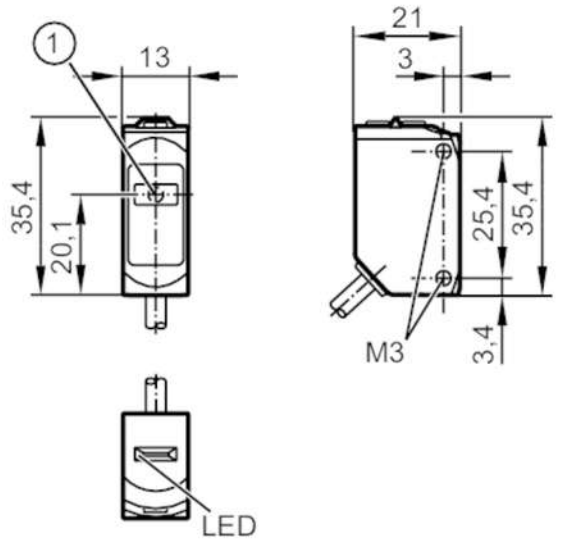

1 light emission

Product characteristics		
Type of light		red light
Laser protection class		1
Housing		rectangular
Application		
Function principle		Through-beam sensor
Electrical data		
Operating voltage	[V]	10...30 DC
Current consumption	[mA]	10; (24 V)
Protection class		III
Reverse polarity protection		yes
Type of light		red light
Wave length	[nm]	650
Detection zone		
Transmitter / receiver		transmitter
Range	[m]	< 15
Diameter of the smallest detectable object	[mm]	7; (15 m)
Max. light spot diameter	[mm]	35
Light spot dimensions refer to		at maximum range
Interfaces		
Communication interface		IO-Link
Transmission type		COM2 (38,4 kBaud)
IO-Link revision		1.1
SDCI standard		IEC 61131-9
Profiles		Smart Sensor: Device Identification, Device Diagnosis

O6S701

Through-beam sensor transmitter

O6SLOOKG/0,30m/US

SIO mode		yes	
Required master port type		A	
Min. process cycle time	[ms]	2.5	
IO-Link process data (cyclical)		**function**	**bit length**
		process value	8
		device status	4
IO-Link functions (acyclical)		application specific tag; operating hours counter; switching cycles counter	
Supported DeviceIDs		**Type of operation**	**DeviceID**
		default	523
Operating conditions			
Ambient temperature	[°C]	-10...60	
Protection		IP 65; IP 67	
Tests / approvals			
EMC		EN 60947-5-2	
Laser protection class		1	
Notes on laser protection		Caution:	laser light
		laser class:	1
			EN / IEC60825-1:2007
			EN / IEC60825-1:2014
			Complies with 21 CFR 1040 except for deviations pursuant to Laser Notice No. 50, dated June 2007.
MTTF	[years]	697	
Mechanical data			
Weight	[g]	33.2	
Housing		rectangular	
Dimensions	[mm]	35.4 x 13 x 21	
Materials		housing: ABS; PPSU; Sealing: EPDM	
Lens material		PMMA	
Lens alignment		side lens	
Tightening torque	[Nm]	0.5; (screws)	
Displays / operating elements			
Display		operation	1 x LED, green
Remarks			
Remarks		operating voltage "supply class 2" according to cULus	
Pack quantity		1 pcs.	

O6S701

Through-beam sensor transmitter

O6SLOOKG/0,30m/US

Electrical connection - plug

Cable: 0.3 m, PUR, black, Ø 3.7 mm; 3 x 0.25 mm²

Connector: 1 x M12; coding: A



Connection

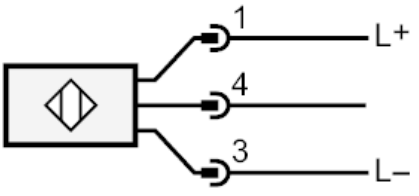

4 IO-Link

Diagrams and graphs

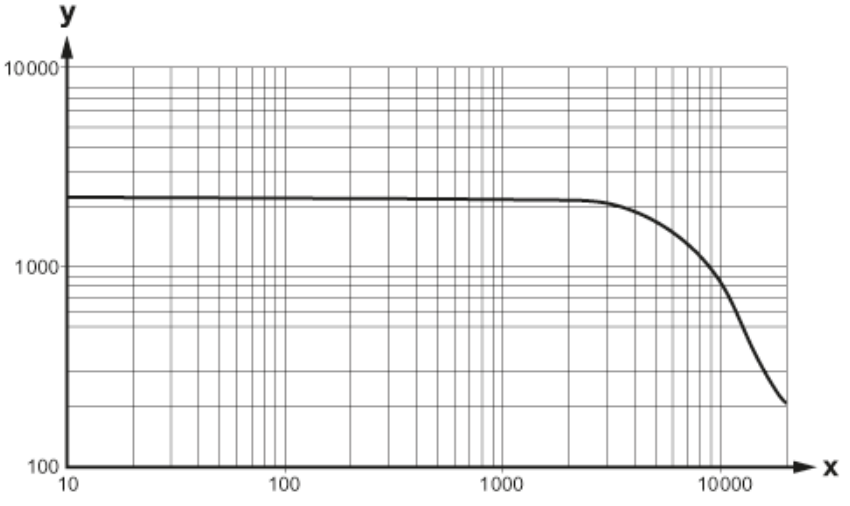

x: Abstand [mm]

y: Funktionsreservefaktor