E80022

Connecting cable with socket

ADOAH080MSS0002K08

For 8-pole sockets the core colours are not standardised.
Please note the wiring of the sensor and the sockets (see data sheet).

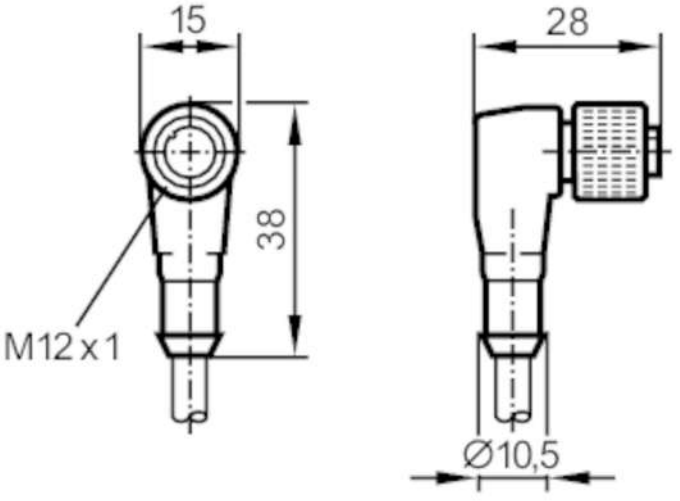

Application		
Special feature		Screened cable
Electrical data		
Operating voltage	[V]	< 30 AC / < 36 DC
Protection class		III
Max. current load total	[A]	2
Operating conditions		
Ambient temperature	[°C]	-25...90
Protection		IP 67
Mechanical data		
Weight	[g]	148.5
Dimensions	[mm]	28 x 15 x 38
Materials		TPU
Moulded-body material		TPU
Material nut		brass, nickel-plated
Remarks		
Pack quantity		1 pcs.

E80022

Connecting cable with socket

ADOAH080MSS0002K08

Electrical connection

Cable: 2 m, PUR, black, shielded; 8 x 0.25 mm² (14 x Ø 0.15 mm)

Electrical connection - socket

Connector: 1 x M12, angled; coding: A; Moulded body: TPU; Locking: brass, nickel-plated; Tightening torque: 1...1.5 Nm; Shielded connection cable: screen connected



Connection

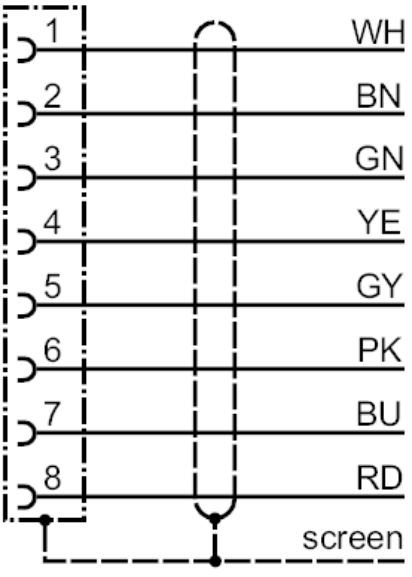

colours to DIN 47100	Core colours :
BN =	brown
BU =	blue
GN =	green
GY =	grey
PK =	pink
RD =	red
WH =	white
YE =	yellow
screen =	screen