

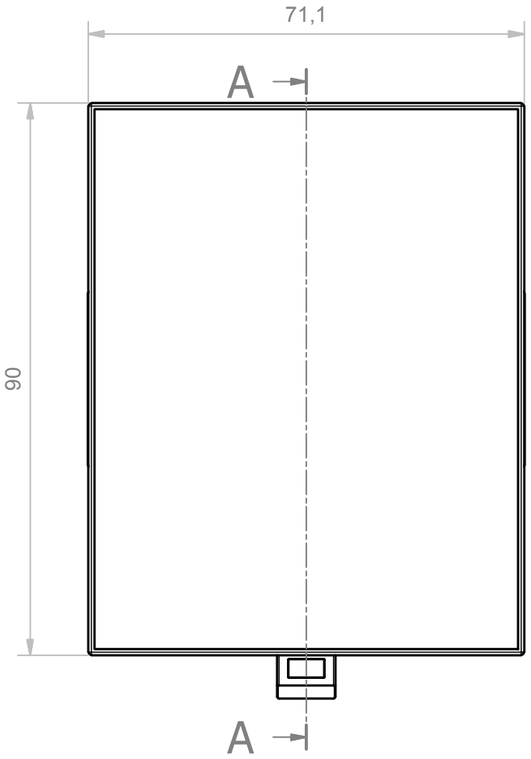

A-A (1 : 1)

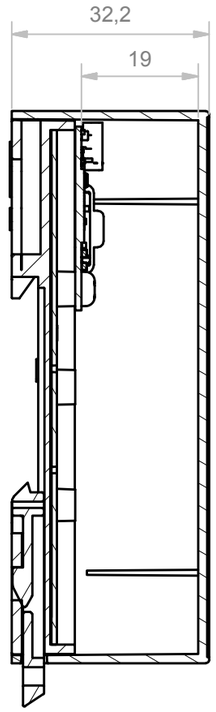

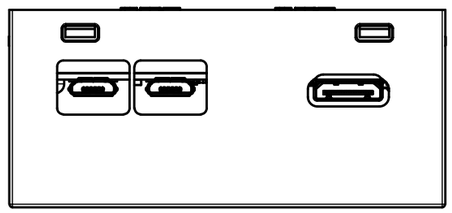

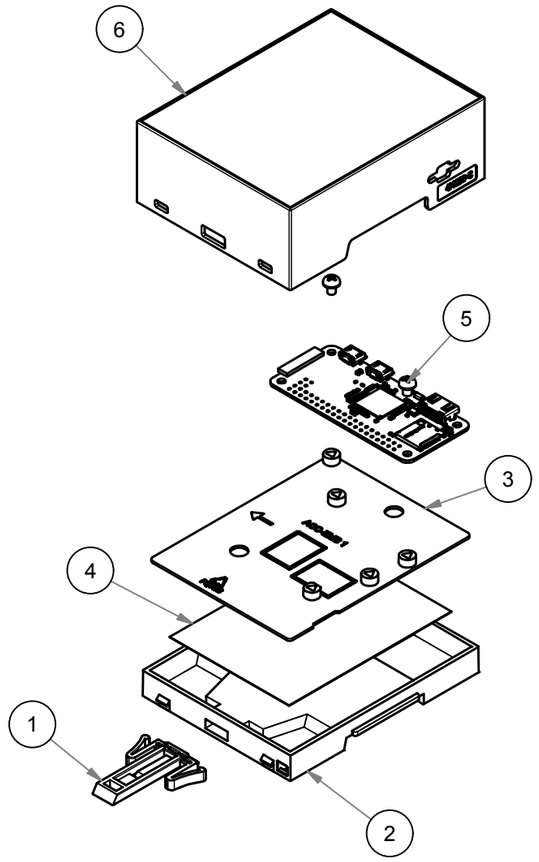

RIF.	Q.TY	DESCRIPTION	DRAWING
1	1	MODULAR HOOK LONG	1.001.01900
2	1	BASE MODULBOX XT/XTS - 4M	1.001.01990
3	1	ACCESSORY FOR BASE EMBEDDED EMB1	2.050.00001
4	1	ADHESIVE FOR ACCESSORY BASE EMBEDDED	2.050.00005
5	2	SCREW 2.9 X 4.5 TC	8.100.00013
6	1	BODY ENCLOSURE 4M XTS COMPACT RASPBERRY PI ZERO	2.050.00009

General Tolerance UNI EN 22768/1 Media (m)				
from 0.5 to 3	from 3 to 6	from 6 to 30	from 30 to 120	from 120 to 400
± 0.1	± 0.1	± 0.2	± 0.3	± 0.5

Scale:	Sheet nr.:	Drawed:	Checked:	Date:	5 4 3 2 1
1 : 1	1 / 1	N.R.	F.F.	20/03/2018	Revision description

	Material:	Weight:	Volume:
Dimension in mm		-	-

italtronic enclosures for electronics
Hitaltech A group of connecting technologies

Description:
CONTENITORE COMPLETO 4M XTS COMPACT RASPBERRY PI ZERO
COMPLETE ENCLOSURE 4M XTS COMPACT RASPBERRY PI ZERO

Drawing nr.: 3.050.00004 | Rev.: 00

RESERVED PROPERTY: The present drawing cannot be reproduced or comunicated to 3d parties, even partially, without the authorization of ITALTRONIC Srl. Italtronic reserves to protect its own rights according to the law.