Reference Manual
00809-0100-4811, Rev DA
January 2015

Rosemount 3300 Series

Guided Wave Radar Level and Interface Transmitters

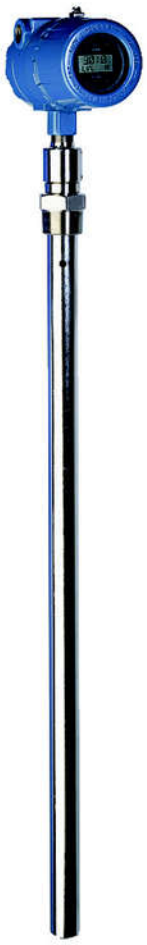



HART COMMUNICATION PROTOCOL

IEC WirelessHART

Modbus

ROSEMOUNT

EMERSON. Process Management

Rosemount 3300 Series

Guided Wave Radar Level and Interface Transmitters

NOTICE

Read this manual before working with the product. For personal and system safety, and for optimum product performance, make sure you thoroughly understand the contents before installing, using, or maintaining this product.

Within the United States, Emerson Process Management has two toll-free assistance numbers.

Customer Central: 1-800-999-9307 (*7:00 a.m. to 7:00 p.m. CST)*
Technical support, quoting, and order-related questions.

North-American Response Center:

Equipment service needs.

1-800-654-7768 (*24 hours a day – Includes Canada*)

For equipment service or support needs outside the United States, contact your local Emerson Process Management representative.

⚠ CAUTION

The products described in this document are NOT designed for nuclear-qualified applications.

Using non-nuclear qualified products in applications that require nuclear-qualified hardware or products may cause inaccurate readings.

For information on Rosemount nuclear-qualified products, contact your local Emerson Process Management Sales Representative.

This product is designed to meet FCC and R&TTE requirements for a non-intentional radiator. It does not require any licensing whatsoever and has no tank restrictions associated with telecommunications issues.

This device complies with part 15 of the FCC rules. Operation is subject to the following two conditions: (1) This device may not cause harmful interference, and (2) this device must accept any interference received, including interference that may cause undesired operation.

Rosemount 3300 Series Guided Wave Radar Level and Interface Transmitters may be protected by one or more U.S. Patents pending and foreign patents pending.

Contents

Section 1: Introduction

1.1 Safety messages 1
1.2 Manual overview 4
1.3 Service support 5
1.4 Product recycling/disposal 5

Section 2: Transmitter Overview

2.1 Theory of operation 7
2.2 Application examples 8
2.3 System architecture 10
2.4 Process characteristics 11
2.4.1 Coating 11
2.4.2 Bridging 11
2.4.3 Foam 11
2.4.4 Vapor 11
2.4.5 Measuring range 11
2.4.6 Interface 12
2.5 Vessel characteristics 13
2.5.1 Heating coils, agitators 13
2.5.2 Tank shape 14
2.6 Components of the transmitter 14
2.7 Probe selection guide 15
2.7.1 Transition zones 16

Section 3: Installation

3.1 Safety messages 17
3.2 Installation procedure 19
3.3 Before you install 20
3.3.1 Alarm and write protection switches 20
3.4 Mounting considerations 22
3.4.1 Process connection 22
3.4.2 Installation of single lead probes in non-metallic tanks 24
3.4.3 Mounting in still pipes/bypass pipes 24
3.4.4 Free space 26
3.4.5 Recommended mounting position 27
3.4.6 Insulated tanks 28

3.5 Mechanical installation 29
3.5.1 Tank connection with flange 29
3.5.2 Tank connection with loose flange (“plate design”) 30
3.5.3 Threaded tank connection 31
3.5.4 Shortening the probe 33
3.5.5 Using a segmented probe 36
3.5.6 Adjusting the probe length 44
3.5.7 Anchoring 47
3.5.8 Mounting a centering disc for pipe installations 49
3.6 Electrical installation 52
3.6.1 Cable/conduit entries 52
3.6.2 Grounding 52
3.6.3 Cable selection 53
3.6.4 Hazardous areas 53
3.6.5 HART 53
3.6.6 HART to Modbus Converter (HMC) 57
3.7 Optional devices 58
3.7.1 Tri-Loop™ 58
3.7.2 Using more than one transmitter on the bus 59
3.7.3 751 Field Signal Indicator 60

Section 4: Basic Configuration/Start-Up

4.1 Safety messages 61
4.2 Configuration parameters 62
4.2.1 Basic configuration 62
4.2.2 Volume configuration 64
4.3 Configuration using a Field Communicator 67
4.4 Basic configuration 69
4.4.1 Transmitter variables 69
4.4.2 Measurement units 70
4.4.3 Reference gauge height 70
4.4.4 Probe length 70
4.4.5 Probe type 70
4.4.6 Product dielectric 71
4.4.7 Vapor dielectric 71
4.4.8 Measurement mode 71
4.4.9 Probe angle 72
4.4.10 Maximum upper product thickness 72

4.4.11 Damping 72
4.4.12 Display panel 72
4.4.13 4 and 20 mA points 73
4.5 Volume configuration 74
4.5.1 Transmitter variables 74
4.5.2 Volume units 74
4.5.3 Tank type 74
4.5.4 Tank dimensions 74
4.5.5 Strapping table 74
4.6 Configuration using the Radar Configuration Tool 75
4.6.1 Installing the RCT software 75
4.6.2 Specifying the COM port 75
4.6.3 Help in RCT 76
4.6.4 Using the Setup Wizard 76
4.6.5 Using the Setup function 78
4.6.6 Setup - Info 79
4.6.7 Setup - Basics 79
4.6.8 Setup - Output 80
4.6.9 Setup - Probe 81
4.6.10 Setup - Geometry 82
4.6.11 Setup - Volume 84
4.6.12 Setup - Display 85
4.6.13 Setup - Signal Quality Metrics 86
4.7 Special functions 87
4.7.1 Tri-Loop™ 87

Section 5: Operation

5.1 Display functionality 91
5.2 Error messages 92
5.3 Alarm and write protection 92

Section 6: Service and Troubleshooting

6.1 Safety messages 93
6.2 Advanced configuration 94
6.2.1 User defined upper reference point 94
6.2.2 Plotting the measurement signal 95
6.2.3 Interface measurements for semi-transparent bottom products 96
6.2.4 High level rates 98

6.2.5 Interface measurements with fully immersed probes 99
6.3 Service 100
6.3.1 Analog output calibration 100
6.3.2 Level and distance calibration 101
6.3.3 Disturbances at the top of the tank 102
6.3.4 Amplitude threshold settings 104
6.3.5 Logging measurement data 107
6.3.6 Saving the transmitter configuration 108
6.3.7 Removing the transmitter head 110
6.3.8 Changing the probe 111
6.4 Diagnostic messages 112
6.4.1 Troubleshooting 112
6.4.2 Errors 113
6.4.3 Warnings 114

Appendix A: Reference Data

A.1 Functional specification 115
A.1.1 General 115
A.1.2 4–20 mA HART® (output option code H) 116
A.1.3 Output 116
A.1.4 Modbus® (output option code M) 119
A.1.5 Display and configuration 121
A.1.6 Temperature limits 123
A.1.7 Process temperature and pressure rating 123
A.1.8 Interface measurements 124
A.2 Performance specification 126
A.2.1 General 126
A.2.2 Measuring range 126
A.2.3 Environment 130
A.3 Physical specification 132
A.3.1 Material selection 132
A.3.2 Housing and enclosure 132
A.3.3 Tank connection and probe 133
A.3.4 Chamber / pipe installations 137
A.4 Dimensional drawings 142
A.5 Proprietary flanges 151
A.6 Ordering information 152

Appendix B: Product Certifications

B.1 Safety messages 159
B.2 EU Conformity 160
B.3 Hazardous locations certifications 161
B.3.1 North American certifications 161
B.3.2 European certifications 163
B.3.3 Chinese certifications 169
B.3.4 Japanese certifications 169
B.3.5 IECEx certifications 170
B.4 Other certifications 172
B.5 Approval drawings 172

Appendix C: Rosemount 3300 Series with HART® to Modbus® Converter

C.1 Safety messages 177
C.2 Introduction 178
C.3 Workflow 179
C.4 Mechanical installation 179
C.5 Electrical installation 180
C.5.1 Connection terminals 181
C.5.2 RS-485 bus 182
C.5.3 Installation cases 182
C.6 Establish HART communication 184
C.6.1 Connect to the MA (+)/MB (-) terminals 184
C.6.2 Connect to the HART terminals 185
C.7 Transmitter configuration 186
C.8 Modbus communication protocol configuration 186
C.8.1 Using RCT to change communication parameters 187
C.8.2 Using a Field Communicator to change communication parameters . 188
C.8.3 Modbus RTU communication setup 188
C.8.4 Levelmaster communication setup 189
C.8.5 Modbus ASCII communication setup 191
C.9 Alarm handling 193
C.9.1 Verify alarm output 194
C.9.2 Use status information to evaluate measurement validity 195
C.9.3 Use Heartbeat to detect errors 195
C.10 Common Modbus host configuration 195

C.10.1 Input registers 196
C.11 Specific Modbus host configuration 199
C.11.1 Emerson Process Management ROC800 Series 199
C.11.2 Emerson Process Management FloBoss 107 200
C.11.3 ABB TotalFlow 201
C.11.4 Thermo Electron Autopilot 201
C.11.5 Bristol ControlWave Micro 202
C.11.6 ScadaPack 203
C.11.7 Kimray DACC 2000/3000 203
C.12 Troubleshooting 204
C.13 HMC Firmware Upgrade in Rosemount Radar Master 205
C.14 Specifications 208

Section 1 Introduction

1.1 Safety messages

Procedures and instructions in this manual may require special precautions to ensure the safety of the personnel performing the operations. Information that raises potential safety issues is indicated by a warning symbol (⚠). Refer to the safety messages listed at the beginning of each section before performing an operation preceded by this symbol.

⚠ WARNING

Failure to follow safe installation and service guidelines could result in death or serious injury.

- Make sure only qualified personnel perform installation or service.
- Use the equipment only as specified in this Reference Manual. Failure to do so may impair the protection provided by the equipment.
- Do not perform any services other than those contained in this manual unless you are qualified.

Explosions could result in death or serious injury.

- Verify that the operating environment of the transmitter is consistent with the appropriate hazardous locations specifications. See Product Certifications on page 159 in this Reference Manual.
- In an Explosion-proof/Flameproof installation, do not remove the transmitter covers when power is applied to the unit.
- Eliminate the risk of ESD discharge prior to dismounting the transmitter head. Probes may generate an ignition-capable level of electrostatic charge under extreme conditions. During any type of installation or maintenance in a potentially explosive atmosphere, the responsible person should make sure that any ESD risks are eliminated before attempting to separate the probe from the transmitter head.
- Before connecting a HART®-based Communicator in an explosive atmosphere, make sure the instruments in the loop are installed in accordance with intrinsically safe or non-incendive field wiring practices.
- To avoid process leaks, only use O-rings designed to seal with the corresponding flange adapter.

Electrical shock can result in death or serious injury.

- Avoid contact with the leads and terminals. High voltage that may be present on leads can cause electrical shock.
- Make sure the main power to the Rosemount 3300 Series Transmitter is off and the lines to any other external power source are disconnected or not powered while wiring the transmitter.

Temperature restrictions apply for Explosion-proof versions. For limits, see certificate-specific information in the Product Certifications chapter in this document.

⚠ WARNING

The electronics enclosures are category 2G or 2D equipments. The probes not covered with plastic are of category 1G or 1D. The plastic-covered probes are only category 1G equipments.

Probes with non-conducting surfaces and light metals

- Probes covered with plastic and/or with plastic discs may generate an ignition-capable level of electrostatic charge under certain extreme conditions. Therefore, when the probe is used in a potentially explosive atmosphere, appropriate measures must be taken to prevent electrostatic discharge. These probes are not allowed in dust classified areas.

  The following probes do not contain plastic or PTFE material, and are allowed to be placed in a Dust classified area:

Code	Material of construction:process connection/probe
1	316L SST (EN 1.4404)
2	Alloy C-276 (UNS N10276)
3	Alloy 400 (UNS N04400)
H	Alloy C-276 (UNS N10276)
D	Duplex process connection

  The Material of Construction Code in the above table can be found in the following position in the Rosemount 3300 Series model code: 330xxxxxN...

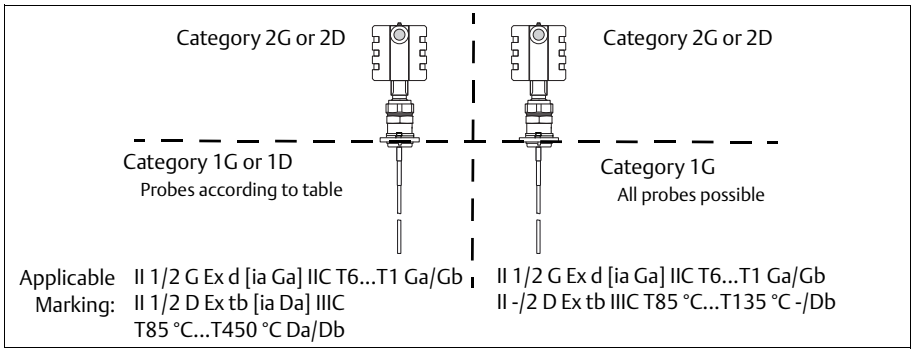

- Probes and flanges containing >7.5% Magnesium or Zirconium are not allowed in explosive dust atmosphere. Please contact Rosemount Tank Radar for additional information.

Probes and flanges containing light metals

- When used in category 1/2G installations, probes and flanges containing Titanium or Zirconium must be mounted in such a way that sparks from impact or friction between these parts and steel cannot occur.

⚠ WARNING

Any substitution of non-authorized parts or repair, other than exchanging the complete transmitter head or probe assembly, may jeopardize safety and is prohibited.

Unauthorized changes to the product are strictly prohibited as they may unintentionally and unpredictably alter performance and jeopardize safety. Unauthorized changes that interfere with the integrity of the welds or flanges, such as making additional perforations, compromise product integrity and safety. Equipment ratings and certifications are no longer valid on any products that have been damaged or modified without the prior written permission of Emerson Process Management. Any continued use of product that has been damaged or modified without prior written authorization is at the customer's sole risk and expense.

1.2 Manual overview

This manual provides installation, configuration and maintenance information for the Rosemount 3300 Series Radar Transmitter.

Section 2: Transmitter Overview

- Theory of operation
- Application examples
- System architecture
- Process and vessel characteristics
- Description of the transmitter

Section 3: Installation

- Mounting considerations
- Mechanical installation
- Electrical installation

Section 4: Basic Configuration/Start-Up

- Configuration instructions
- Configuration using the HART Communicator
- Configuration using the RCT software

Section 5: Operation

- Display functionality
- Error messages
- Alarm and write protection

Section 6: Service and Troubleshooting

- Advanced configuration
- Service
- Diagnostic messages

Appendix A: Reference Data

- Specifications
- Ordering Information

Appendix B: Product Certifications

- Examples of labels
- EU conformity
- European ATEX Directive information
- FM approvals
- CSA approvals
- Approval drawings

Appendix C: Rosemount 3300 Series with HART® to Modbus® Converter

- Installation, configuration, and troubleshooting of the HART to Modbus Converter

1.3 Service support

To expedite the return process outside of the United States, contact the nearest Emerson Process Management representative.

Within the United States, call the Emerson Process Management Instrument and Valves Response Center using the 1-800-654-RSMT (7768) toll-free number. This center, available 24 hours a day, will assist you with any needed information or materials.

The center will ask for product model and serial numbers, and will provide a Return Material Authorization (RMA) number. The center will also ask for the process material to which the product was last exposed.

⚠ CAUTION

Individuals who handle products exposed to a hazardous substance can avoid injury if they are informed of and understand the hazard. If the product being returned was exposed to a hazardous substance as defined by Occupational Safety and Health Administration (OSHA), a copy of the required Material Safety Data Sheet (MSDS) for each hazardous substance identified must be included with the returned goods.

Emerson Process Management Instrument and Valves Response Center representatives will explain the additional information and procedures necessary to return goods exposed to hazardous substances.

1.4 Product recycling/disposal

Recycling of equipment and packaging should be taken into consideration and disposed of in accordance with local and national legislation/regulations.

Section 2 Transmitter Overview

Theory of operation 7
Application examples 8
System architecture 10
Process characteristics 11
Vessel characteristics 13
Components of the transmitter 14
Probe selection guide 15

2.1 Theory of operation

The Rosemount 3300 Series Radar Transmitter is a smart, two-wire continuous level transmitter that is based on Time Domain Reflectometry (TDR) principles. Low power nano-second-pulses are guided along a probe immersed in the process media. When a pulse reaches the surface of the material it is measuring, part of the energy is reflected back to the transmitter, and the time difference between the generated and reflected pulse is converted into a distance from which the total level or interface level is calculated (see below).

The reflectivity of the product is a key parameter for measurement performance. A high dielectric constant of the media gives better reflection and a longer measuring range. A calm surface gives better reflection than a turbulent surface.

Figure 2-1. Measurement Principle

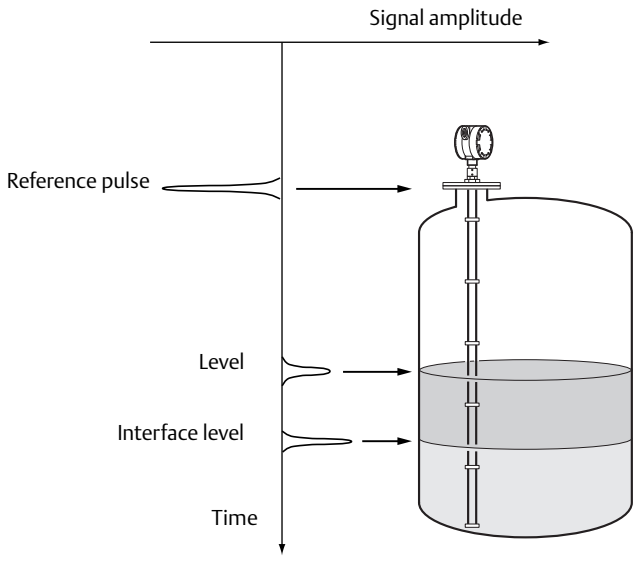

2.2 Application examples

The Rosemount 3300 Series Radar Transmitter program is suited for aggregate (total) level measurements on most liquids, semi-liquids, and liquid/liquid interfaces.

Guided microwave technology offers highest reliability and precision which ensure measurements are virtually unaffected by temperature, pressure, vapor gas mixtures, density, turbulence, bubbling/boiling, low level, varying dielectric media, pH, and viscosity.

Guided wave radar technology in combination with advanced signal processing make the Rosemount 3300 Series Transmitters suitable for a wide range of applications.

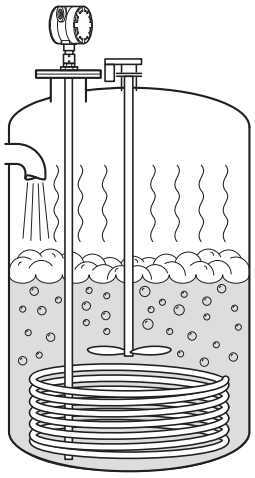

Boiling conditions with vapor and turbulence

For these applications the Coaxial probe is particularly suitable.

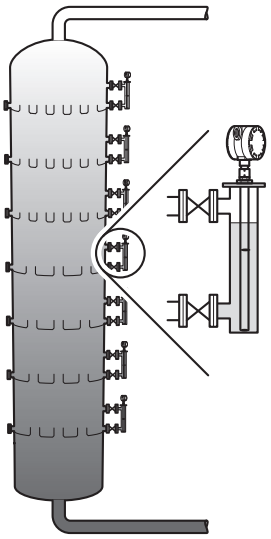

Bridle applications

The Rosemount 3300 Series Transmitters are well suited for bridle applications, such as distillation columns.

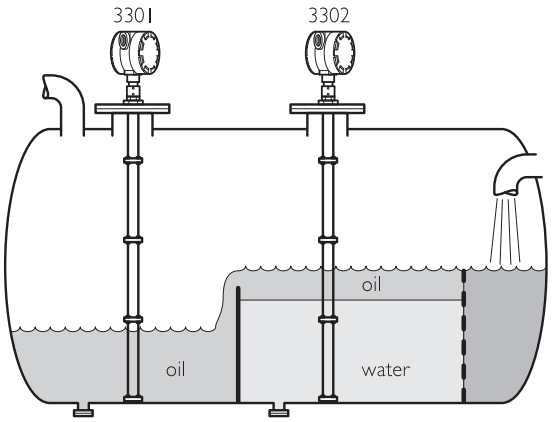

Separator tanks

The Rosemount 3302 Series measures both level and interface level.

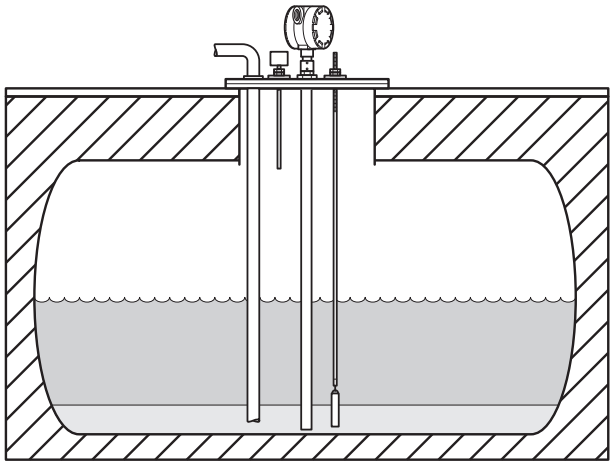

Underground tanks

The Rosemount 3300 Series is a good choice for underground tanks since it is installed on the tank top with the radar pulse concentrated near the probe. It can be equipped with probes that are unaffected by high and narrow openings or nearby objects.

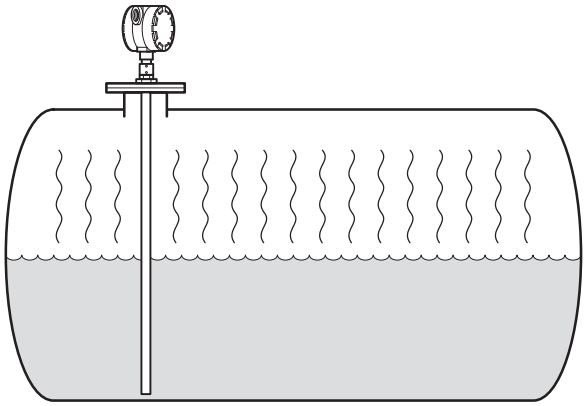

Small ammonia, NGL, and LPG tanks

Guided wave radar technology is a good choice for reliable measurements in small ammonia, NGL, and LPG tanks.

2.3 System architecture

The Rosemount 3300 Series Radar Transmitter is loop-powered which means it uses the same two wires for both power supply and output signal. The output is a 4-20 mA analog signal superimposed with a digital HART® signal.

By using the optional HART Tri-Loop™, it is possible to convert the HART signal to up to three additional 4-20 mA analog signals.

With the HART protocol it is possible to use multidrop configuration. In this case communication is restricted to digital since current is fixed to the 4 mA minimum value.

The transmitter can be connected to display Rosemount 751 Field Signal Indicator or it can be equipped with an integral display.

The transmitter can easily be configured by using a Field Communicator or a PC with the Radar Configuration Tool (RCT) software. Rosemount 3300 Series Transmitters are also compatible with the AMS® Suite software which can also be used for configuration.

Figure 2-2. System Architecture

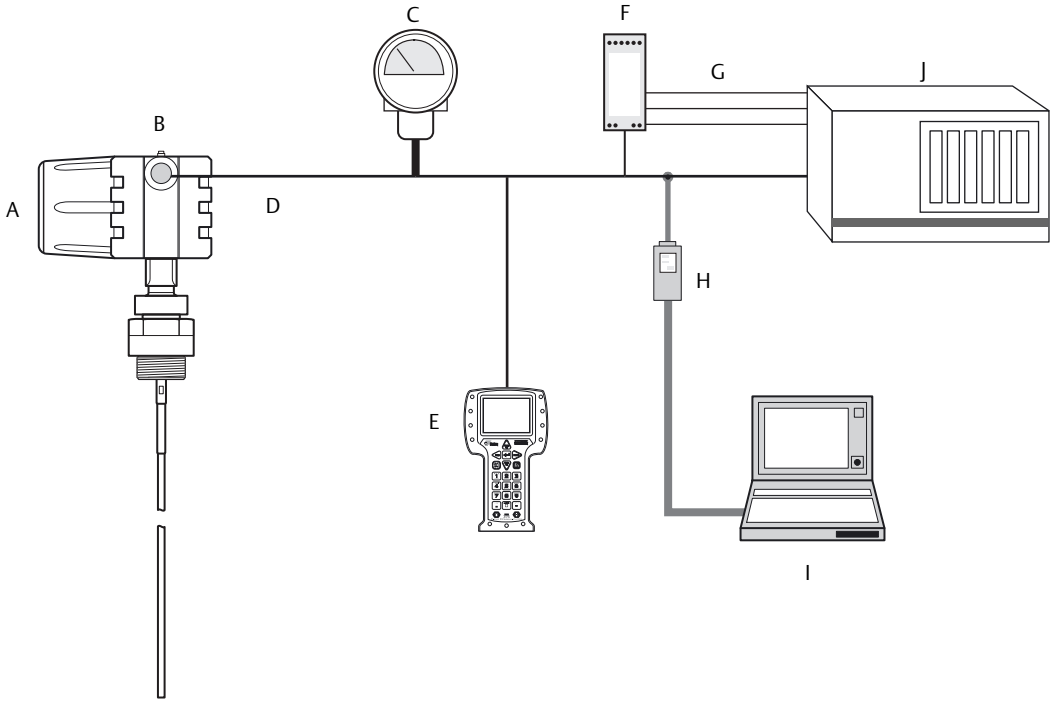

A	Integral display	F	Tri-Loop
B	Rosemount 3300 Series Radar Transmitter	G	3 x 4-20 mA
C	Rosemount 751 Field Signal Indicator	H	HART modem
D	4-20 mA/HART	I	RCT or AMS Suite
E	Field Communicator	J	DCS

Note
For HART communication, a minimum load resistance of 250 Ω within the loop is required.

2.4 Process characteristics

The Rosemount 3300 Series has high sensitivity due to its advanced signal processing and high signal to noise ratio, which makes it able to handle various disturbances. However, the following circumstances should be considered before mounting the transmitter.

2.4.1 Coating

Coating on the probe should be avoided since the sensitivity of the transmitter may be decreased leading to measurement errors. In viscous or sticky applications, periodic cleaning may be required.

For viscous or sticky applications, it is important to select a suitable probe. For detailed information on the maximum recommended viscosity and coating, see Table A-6 on page 131.

Maximum measurement error due to coating is 1-10% depending on probe type, dielectric constant, coating thickness, and coating height above product surface.

2.4.2 Bridging

Heavy coating that results in product bridging across the two probes for twin lead versions, or between the pipe and the inner rod for coaxial probes, causes erroneous level readings and must be prevented. Single lead probes are preferred in this case. If a twin lead probe is required, regular cleaning may be necessary.

2.4.3 Foam

How well the Rosemount 3300 Series Radar Transmitter measures in foamy applications depends upon the properties of the foam; light and airy or dense and heavy, high or low dielectrics, etc. If the foam is conductive and creamy, the transmitter will probably measure the surface of the foam. If the foam is less conductive, the microwaves will probably penetrate the foam and measure the liquid surface.

2.4.4 Vapor

In some applications, such as ammonia, there is heavy vapor above the product surface that will influence the level measurement. The Rosemount 3300 Series Radar Transmitter can be configured to compensate for the influence of vapor.

2.4.5 Measuring range

The measuring range differs depending on probe type and characteristics of the application. The values given in Table A-4 on page 128 can be used as a guideline for clean liquids.

The maximum measuring range differs depending on application according to:

- Disturbing objects close to the probe.
- Media with higher dielectric constant (ε_r) give better reflection and allow a longer measuring range.
- A calm surface gives better reflection than a turbulent surface. For a turbulent surface, the measuring range might be reduced.

- Surface foam and particles in the tank atmosphere are also circumstances that might affect measuring performance.
- Coating/contamination can reduce the measuring range.
- Disturbing EMC environment in tank.

2.4.6 Interface

Rosemount 3302 is the ideal choice for measuring the interface of oil and water, or other liquids with significant dielectric differences. It is also possible to measure interface with a Rosemount 3301 in applications where the probe is fully immersed in the liquid.

Figure 2-3. Interface Measurement with a Rosemount 3302 and a Rosemount 3301 (Fully Immersed Probe)

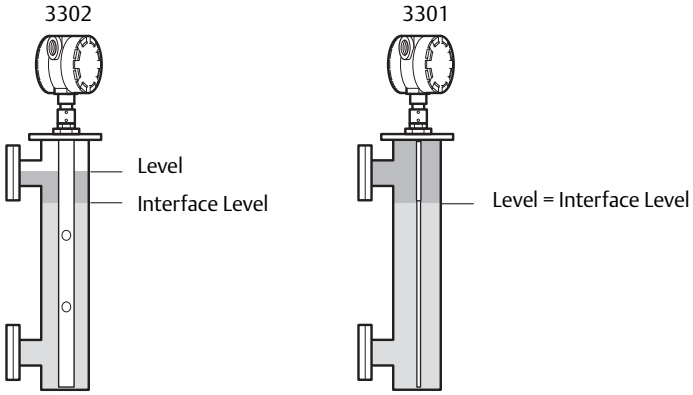

Coaxial, Rigid Twin, Flexible Twin and Rigid Single lead probes can be used for measuring interfaces. The coaxial probe is the preferred choice for clean liquids and when the bridle is not fully immersed. In applications with a fully immersed probe, the twin lead probes are recommended for nozzle installations, and the rigid single lead probe is best for bridle mounting.

For measuring the interface level, the transmitter uses the residual wave of the first reflection. Part of the wave, which was not reflected at the upper product surface, continues until it is reflected at the lower product surface. The speed of this wave depends fully on the dielectric constant of the upper product.

If interface is to be measured, the following criteria have to be fulfilled:

- The dielectric constant of the upper product must be known. The RCT software has a built-in dielectric constant calculator to assist users in determining the dielectric constant of the upper product (see “Dielectrics” on page 83).
- The dielectric constant of the upper product must have a lower dielectric constant than the lower product in order to have a distinct reflection.
- The difference between the dielectric constants for the two products must be larger than 10.
- The maximum dielectric constant for the upper product is 10 for the coaxial probe, and 5 for twin lead probes.
- The upper product thickness must be larger than 8 in. (0.2 m) for the flexible twin lead probe, and 4 in. (0.1 m) for the rigid twin lead and coaxial probes in order to distinguish the echoes of the two liquids.

The maximum allowable upper product thickness/measuring range is primarily determined by the dielectric constants of the two liquids.

Target applications include interfaces between oil/oil-like and water/water-like liquids. For such applications, the upper product dielectric constant is low (< 3) and the lower product dielectric constant is high (> 20). The maximum measuring range is only limited by the length of the coaxial and rigid twin lead probes.

For the flexible twin lead probe, the reduction of maximum measuring range (65 ft/20 m), can be gained from Figure 2-4 on page 13.

However, characteristics varies widely between different applications. For other product combinations, consult factory.

Figure 2-4. Reduction of Maximum Measuring Range for Flexible Twin Lead Probes

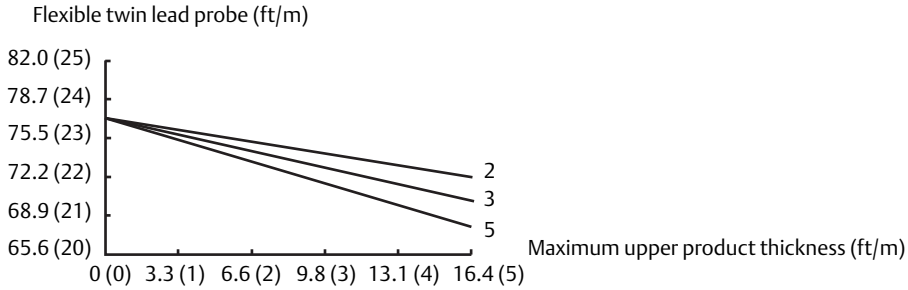

Emulsion layers

Sometimes there is an emulsion layer (mix of the products) between the two products which, depending on its characteristics, will affect interface measurements.

Please consult factory for guidelines on how to handle emulsion layers.

2.5 Vessel characteristics

2.5.1 Heating coils, agitators

The Rosemount 3300 Series Radar Transmitter is relatively insensitive to objects in the tank since the radar signal is transmitted along a probe.

Avoid physical contact between probes and agitators as well as applications with strong fluid movement unless the probe is anchored. If the probe can move within 1 ft (30 cm) away from any object, such as an agitator, during operation, then probe tie-down is recommended.

In order to stabilize the probe for side forces, it is possible to hang a weight at the probe end (flexible probes only) or fix/guide the probe to the tank bottom.

2.5.2 Tank shape

The guided wave radar transmitter is insensitive to the tank shape. Since the radar signal travels along a probe, the shape of the tank bottom has virtually no effect on the measurement performance. The transmitter handles flat or dish-bottom tanks equally well.

2.6 Components of the transmitter

The Rosemount 3300 Series Radar Transmitter has an aluminum transmitter housing which contains advanced electronics for signal processing.

The radar electronics produces an electromagnetic pulse which is guided by the probe.

There are different probe types available for various applications: Rigid Twin Lead, Flexible Twin Lead, Rigid Single Lead, Segmented Rigid Single Lead, Flexible Single Lead, and Coaxial.

Figure 2-5. Transmitter Components

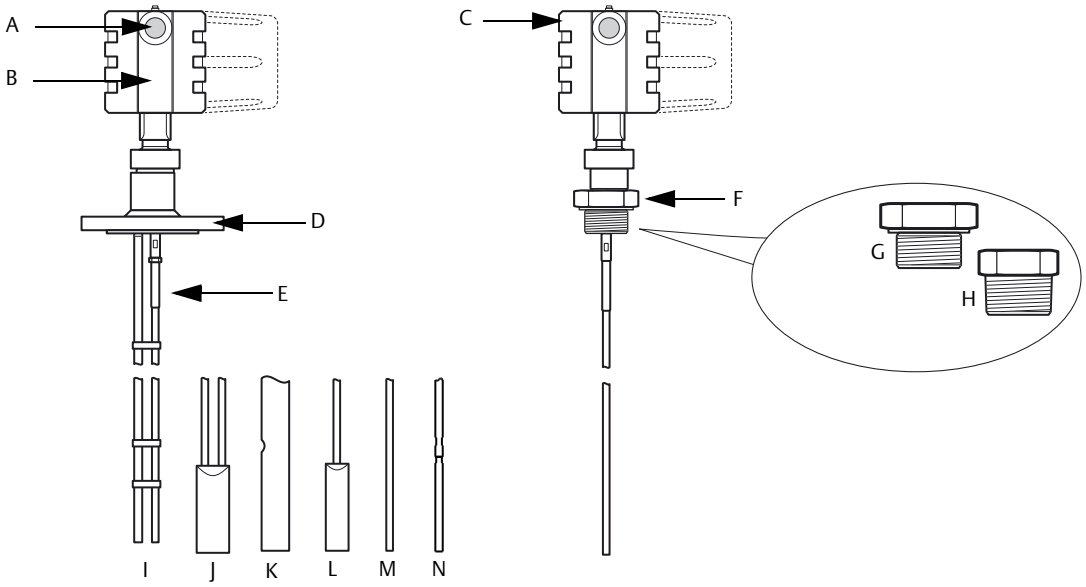

A	Cable entry: ½" NPT. Optional adapters: M20, PG13.5	I	Rigid twin lead probe
B	Radar electronics	J	Flexible twin lead probe with weight
C	Dual compartment housing	K	Coaxial probe
D	Flanged process connections	L	Flexible single lead probe with weight
E	Probe	M	Rigid single lead probe with weight
F	Threaded process connections	N	Segmented rigid single lead probe
G	BSP (G)		
H	NPT		

Note
Flexible and rigid probes require different radar electronics and cannot be used with the same transmitter head.

2.7 Probe selection guide

Use the following guidelines to select appropriate probe for your Rosemount 3300 Series Transmitter:

Table 2-1. Probe Selection Guide

G = Good, NR = Not Recommended, AD = Application Dependent (consult factory)

	Coaxial	Rigid twin lead	Flexible twin lead	Rigid single lead, segmented rigid single lead	Flexible single lead
Measurements					
Level	G	G	G	G	G
Interface (liquid/liquid)	G(1)	G	G	NR	NR
Process medium characteristics					
Changing density	G	G	G	G	G
Changing dielectric(2)	G	G	G	G	G
Wide pH variations	G	G	G	G	G
Pressure changes	G	G	G	G	G
Temperature changes	G	G	G	G	G
Condensing vapors	G	G	G	G	G
Bubbling/boiling surfaces	G	G	AD	G	AD
Foam (mechanical avoidance)	AD	NR	NR	NR	NR
Foam (top of foam measurement)	NR	AD	AD	AD	AD
Foam (foam and liquid measurement)	NR	AD	AD	NR	NR
Clean liquids	G	G	G	G	G
Liquid with dielectric < 2.5	G	AD	AD	AD(3)	NR
Coating liquids	NR	NR	NR	AD(4)	AD
Viscous liquids	NR	AD	AD	AD(4)	G
Crystallizing liquids	NR	NR	NR	AD	AD
Solids/Powders	NR	NR	NR	AD	AD
Fibrous liquids	NR	NR	NR	G	G
Tank environment considerations					
Probe is close (< 12 in./30 cm) to tank wall / disturbing objects	G	AD	AD	NR	NR
High turbulence	G	G	AD	G	AD
Turbulent conditions causing breaking forces	NR	NR	AD	NR	AD
Long and small mounting nozzles (diameter < 6 in./15 cm, height > diameter + 4 in./ 10 cm)	G	AD	NR	NR	NR
Probe might touch nozzle / disturbing object	G	NR	NR	NR	NR
Liquid or vapor spray might touch probe	G	NR	NR	NR	NR
Disturbing EMC environment in tank	AD	NR	NR	NR	NR

(1) Not in fully immersed applications.
(2) For overall level applications, a changing dielectric has no effect on the measurement. For interface measurements, a changing dielectric of the top fluid degrades the accuracy of the interface measurement.
(3) OK when installed in pipe.
(4) For viscous or sticky applications, it is not recommended to use centering discs mounted along the probe.

2.7.1 Transition zones

The measuring range depends on probe type and properties of the product. The upper transition zone is the minimum measurement distance between the upper reference point and the product surface. The upper transition zone varies between 4 - 20 in. (0.1 and 0.5 m) depending on probe type and product.

At the end of the probe, the measuring range is reduced by the lower transition zone. The lower transition zone also varies depending on probe type and product.

Figure 2-6 illustrates how the measuring range is related to the transition zones.

Figure 2-6. Transition Zones

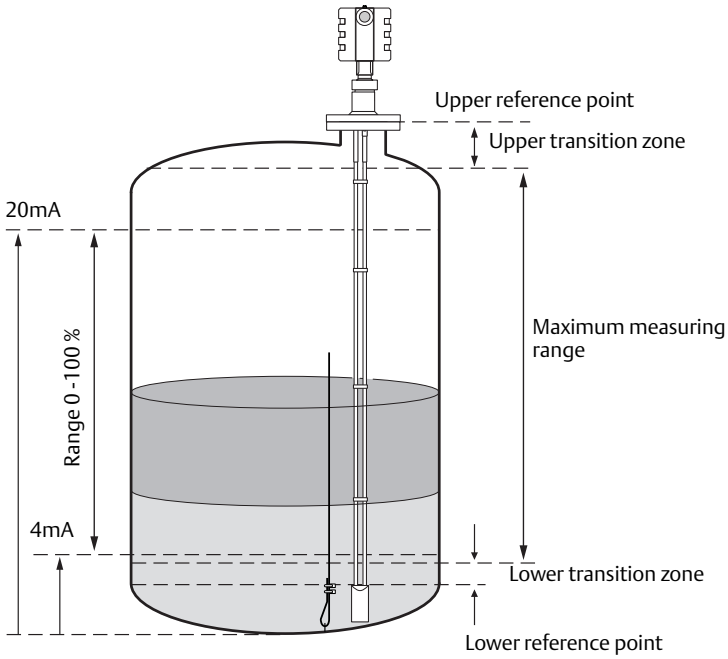

For detailed information on transition zones for different probe types, see Table A-4 on page 128.

Note
Measurement accuracy is reduced in the transition zones. It may even be impossible to make any measurements at all in those regions. Therefore, the 4-20 mA set points must be configured outside the transition zones.

Section 3 Installation

Safety messages 17
Installation procedure 19
Before you install 20
Mounting considerations 22
Mechanical installation 29
Electrical installation 52
Optional devices 58

3.1 Safety messages

Procedures and instructions in this section may require special precautions to ensure the safety of the personnel performing the operations. Information that raises potential safety issues is indicated by a warning symbol (⚠). Please refer to the following safety messages before performing an operation preceded by this symbol.

⚠ WARNING

Explosions could result in death or serious injury.

- Verify that the operating environment of the transmitter is consistent with the appropriate hazardous locations certifications.
- Before connecting a HART®-based communicator in an explosive atmosphere, make sure the instruments in the loop are installed in accordance with intrinsically safe or non-incendive field wiring practices.
- In an Explosion-proof/flameproof installation, do not remove the transmitter cover when power is applied to the unit.
- Eliminate the risk of ESD discharge prior to dismounting the transmitter head.
- Probes may generate an ignition- capable level of electrostatic charge under extreme conditions. During any type of installation or maintenance in a potentially explosive atmosphere, the responsible person should make sure that any ESD risks are eliminated before attempting to separate the probe from the transmitter head.

⚠ WARNING

Failure to follow safe installation and servicing guidelines could result in death or serious injury.

- Make sure only qualified personnel perform the installation.
- Use the equipment only as specified in this manual. Failure to do so may impair the protection provided by the equipment.
- Do not perform any service other than those contained in this manual unless you are qualified.

Process leaks could result in death or serious injury.

- Make sure that the transmitter is handled carefully. If the Process Seal is damaged, gas might escape from the tank when the transmitter head is removed from the probe.

High voltage that may be present on leads could cause electrical shock.

- Avoid contact with leads and terminals.
- Make sure the main power to the Rosemount 3300 Series Transmitter is off and the lines to any other external power source are disconnected or not powered while wiring the gauge.
- Probes covered with plastic and/or with plastic discs may generate an ignition-capable level of electrostatic charge under certain extreme conditions. Therefore, when the probe is used in a potentially explosive atmosphere, appropriate measures must be taken to prevent electrostatic discharge.

3.2 Installation procedure

Follow these steps for proper installation:

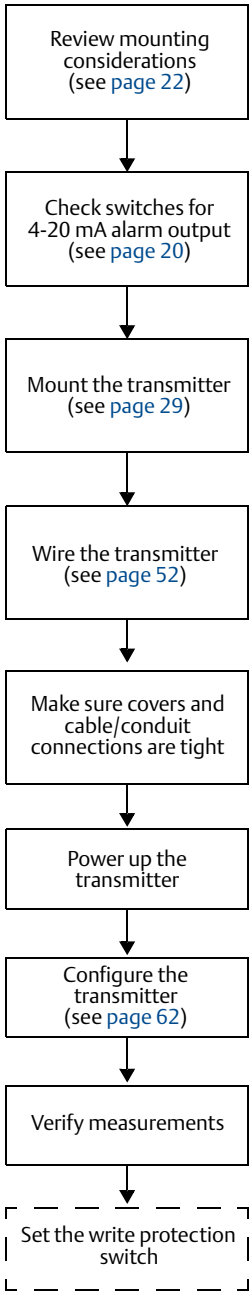

Note
Disconnect power supply before setting the write protection.

3.3 Before you install

3.3.1 Alarm and write protection switches

Electronic boards are electrostatically sensitive. Failure to observe proper handling precautions for static-sensitive components can result in damage to the electronic components. Do not remove the electronic boards from the Rosemount 3300 Series Radar Transmitter.

Note
To ensure long life for your radar transmitter, and to comply with hazardous location installation requirements, tighten covers on both sides of the electronics housing.

Table 3-1. Rosemount 3300 Series Radar Transmitter Switch Settings

Switch bank	Description	Default setting	Position settings
Alarm	4–20 mA alarm output	High	High, Low
Write protect	Security write protection	Disabled (OFF)	ON = enabled, OFF = disabled

Table 3-2. Analog Output: Standard Alarm vs. Saturation Values

Level	4–20 mA saturation values	4–20 mA alarm value
Low	3.9 mA	3.75 mA
High	20.8 mA	21.75 mA

Table 3-3. Analog Output: NAMUR-Compliant Alarm Values vs. Saturation Values

Level	4–20 mA saturation values	4–20 mA alarm value
Low	3.8 mA	3.6 mA
High	20.5 mA	22.5 mA

The transmitter monitors its own operation. This automatic diagnostic routine is a timed series of checks repeated continuously. If the diagnostic routine detects a failure in the transmitter, the 4–20 mA output is driven upscale (high) or downscale (low) depending on the position of the Alarm switch.

Security write protection prevents unauthorized access to configuration data through the Rosemount Configuration Tool (RCT) software, a Field Communicator or AMS® Suite software.

Figure 3-1. Switches for Alarm and Write Protection

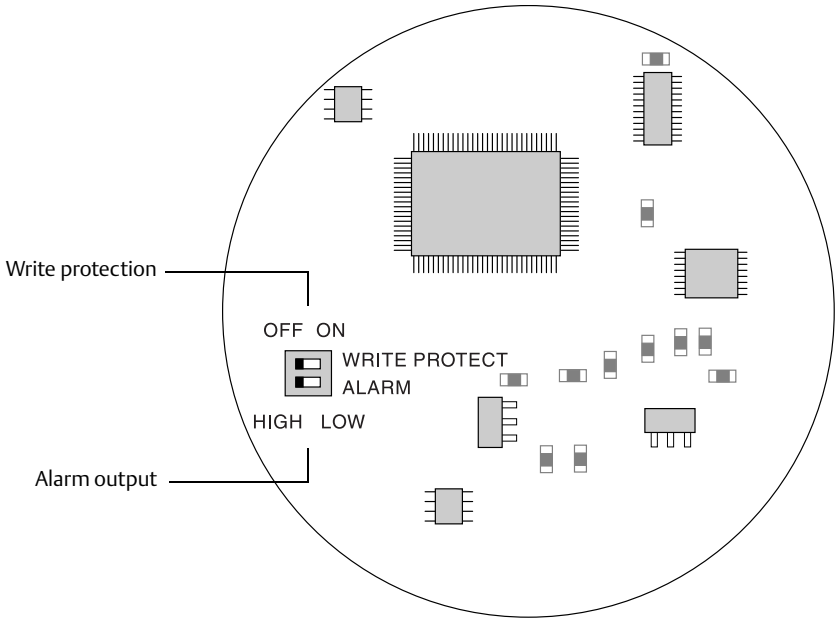

To set the alarm and write protect switches do the following:

1. Remove the cover on the circuit side (see main label).
2. To set the 4-20 mA alarm output to Low, move the alarm switch to the LOW position. The factory default setting is HIGH (see Figure 3-1).
3. To enable the security write protection feature, move the write protect switch to the ON position. The factory default setting is the OFF position (see Figure 3-1).
4. Replace and tighten the cover.

3.4 Mounting considerations

Before installing the Rosemount 3300 Series Radar Transmitter, consider specific mounting requirements, vessel characteristics, and process characteristics.

3.4.1 Process connection

The Rosemount 3300 Series has a threaded connection for easy mounting on the tank roof. It can also be mounted on a nozzle by using different flanges.

Threaded connection

Figure 3-2. Mounting on Tank Roof Using Threaded Connection

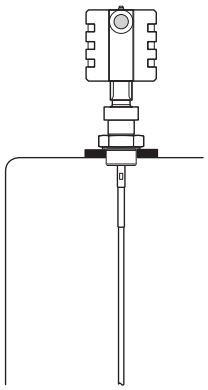

Mounting on tank roof.

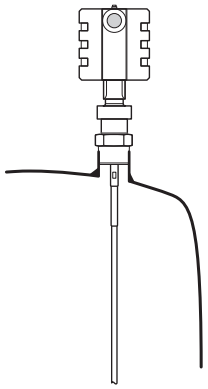

Mounting in threaded pipe.

Flange connection on nozzles

Figure 3-3. Mounting in Nozzles

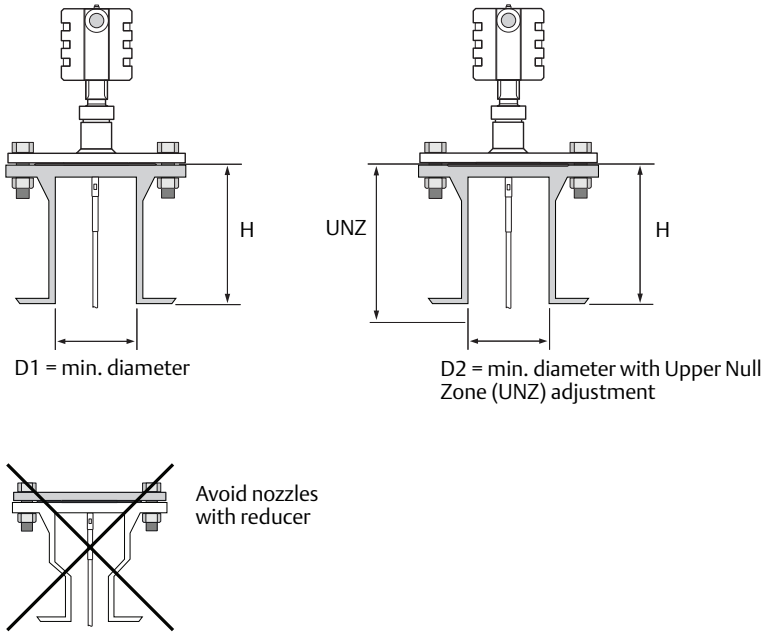

The transmitter can be mounted in nozzles by using an appropriate flange. It is recommended that the nozzle size is within the dimensions given in Table 3-4. For small nozzles, it may be necessary to increase the Upper Null Zone (UNZ) to reduce the measuring range in the upper part of the tank. By setting the UNZ equal to the nozzle height, the impact on the measurement due to interfering echoes from the nozzle will be reduced to a minimum. See also "Disturbances at the top of the tank" on page 102. Amplitude Threshold adjustments may also be needed in this case.

Note
Except for the coaxial probe, the probe must not be in contact with the nozzle.

Table 3-4. Minimum Nozzle Diameter D1/D2 and Maximum Nozzle Height H (in./mm)

	Rigid twin lead	Flexible twin lead	Coaxial	Single lead	Flexible single
D1(1)	4/100	4/100	> Probe diameter	6/150	6/150
D2(2)	2/50	2/50	> Probe diameter	2/50(3) 1.5/38(4)	2/50
H(5)	4/100 + D(6)	4/100 + D(6)	N/A	4/100 + D(6)	4/100 + D(6)(7)

(1) UNZ = 0.
(2) UNZ > 0.
(3) Process connection 1.5 in. (37.5 mm).
(4) Process connection 1 in. (25 mm).
(5) Recommended maximum nozzle height. For coaxial probes, there is no limitation on nozzle height.
(6) Nozzle diameter.
(7) For tall nozzles, the Long Stud version is recommended (Option Code: LS).

3.4.2 Installation of single lead probes in non-metallic tanks

For optimal single lead probe performance in non-metallic tanks, the probe must be mounted with a metal flange, or screwed in to a metal sheet (d > 14 in./350 mm) if the threaded version is used.

Figure 3-4. Mounting in Non-Metallic Tanks

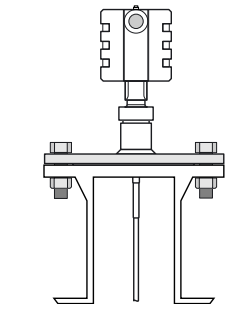

Metal flange d > 2 in. /DN50

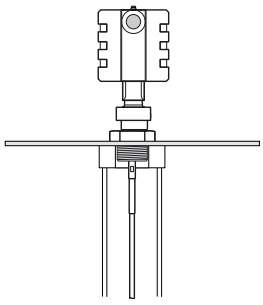

Metal sheet d > 14 in. /350 mm

Avoid disturbing Electro Magnetic Compatibility (EMC) environment near the tank. Installation in metallic tank is recommended.

3.4.3 Mounting in still pipes/bypass pipes

In order to prevent the probe from contacting the bridle wall when replacing displacers or installing in pipes, centering discs are available for the Rigid Single, Segmented Rigid Single, Flexible Single, and Flexible Twin Lead probes. The disc is attached to the end of the probe and thus keeps the probe centered in the bridle. The discs are available in stainless steel, Alloy C-276, Alloy 400, and PTFE. See also “Mounting a centering disc for pipe installations” on page 49.

Note
It is not recommended that flexible probes are installed in bypass pipes.

Rigid single lead, segmented rigid single lead

- Pipe diameter Ø ≥ 2 in. (50 mm)
- Inlet pipe diameter N < Ø
- L ≥12 in. (300 mm)

Flexible single lead

- Pipe diameter Ø ≥ 4 in. (100 mm).

Note
For smaller pipes, please consult factory.

Make sure the probe is at the center of the still pipe by, for example, using a centering disc.

Figure 3-5. Rigid Single and Flexible Single Probes in Still Pipes

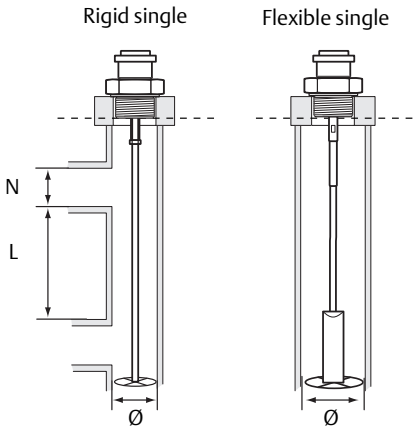

Note
It is not recommended that flexible probes are installed in bypass pipes.

Rigid twin lead

- Pipe diameter Ø ≥ 2 in. (50 mm)
- Inlet pipe diameter N < Ø
- L ≥ 12 in. (300 mm)
- The center rod must be placed more than 0.6 in./15 mm away from the pipe wall.

Flexible twin lead

- Pipe diameter Ø ≥ 4 in. (100 mm)

Note
For smaller pipes, please consult factory.

The center rod must be placed more than 0.6 in./15 mm away from the pipe wall. The probe may under no circumstances get into contact with the pipe wall. It is recommended that a centering disc is used.

Figure 3-6. Rigid Twin and Flexible Twin Probes in Still Pipes

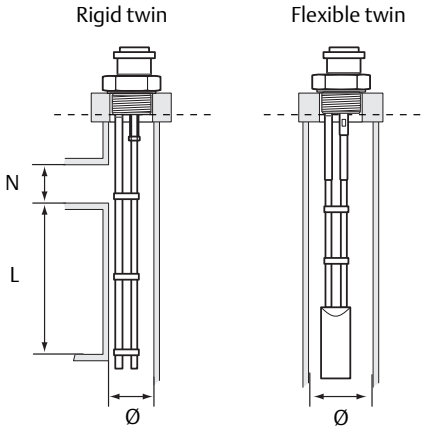

Coaxial lead

- Pipe diameter Ø ≥ 1.5 in. (38 mm)

Figure 3-7. Coaxial Lead Probe in a Still Pipe

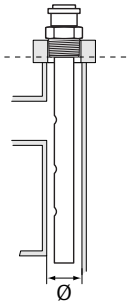

3.4.4 Free space

For easy access to the transmitter, make sure it is mounted with sufficient service space. For maximum measurement performance the transmitter should not be mounted too close to the tank wall or other objects in the tank.

If the probe is mounted close to a wall, nozzle or other tank obstruction noise might appear in the level signal. Therefore, the following minimum clearance, according to the table below, must be maintained:

Figure 3-8. Free Space Requirement

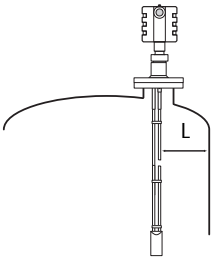

For information on the recommended minimum free space (L) to tank wall or other objects in the tank, see Table 3-5.

Table 3-5. Recommended Minimum Free Space (L)

Coaxial	Rigid twin	Flexible twin
0 in. (0 mm)	4 in. (100 mm)	4 in. (100 mm)

For information on the recommended minimum free space (L) to tank wall or other objects in the tank in the case of rigid single, segmented rigid single and flexible single lead probes, see Table 3-6.

Table 3-6. Free Space (L) Requirements - Single Lead Probes

Rigid single/segmented rigid single/flexible single	
4 in. (100 mm)	Smooth metal wall
12 in. (300 mm)	Disturbing objects, such as pipes and beams, concrete or plastic tank walls, rugged metal tank walls

3.4.5 Recommended mounting position

When finding an appropriate mounting position for the transmitter, the conditions of the tank must be carefully considered. The transmitter should be mounted so that the influence of disturbing objects is reduced to a minimum.

In case of turbulence, the probe may need to be anchored to the bottom. See "Mechanical installation" on page 29 for more information.

Figure 3-9. Mounting Position

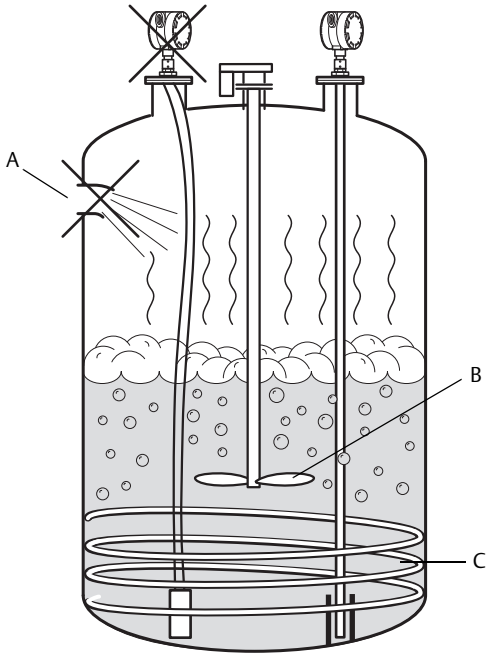

A Inlet pipe
B Agitator
C Heating coils

The following guidelines should be considered when mounting the transmitter:

- Do not mount close to inlet pipes.
- Do not mount close to agitators. If the probe can move to within 11.8 in. (30 cm) away from an agitator, a probe tie-down is recommended.
- If the probe tends to sway due to turbulent conditions in the tank, the probe should be anchored to the tank bottom.
- Avoid mounting close to heating coils.
- Make sure the nozzle does not extend into the tank.

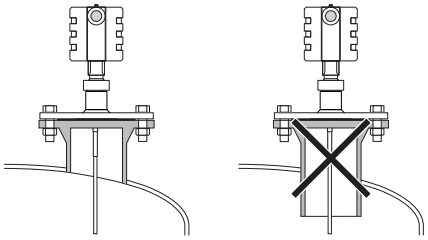

- Make sure the probe does not come into contact with the nozzle or other objects in the tank.
- Position the probe such that it is subject to a minimum of lateral force.

Note
Violent fluid movements causing high sideway forces may break rigid probes.

3.4.6 Insulated tanks

For insulated tanks, the permitted ambient temperature is limited above a certain process temperature. Limitations depend on the thickness of the tank insulation, see "Ambient temperature" on page 123 for more information.

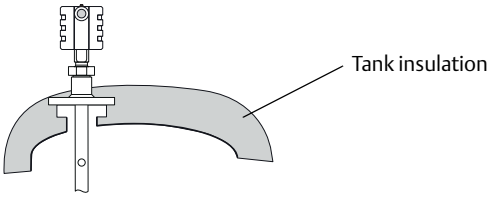

Figure 3-10. Maximum Ambient Temperature vs. Process Temperature

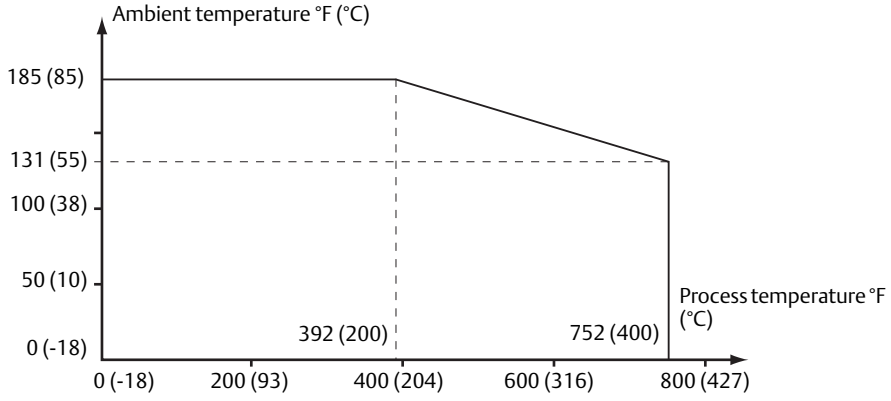

3.5 Mechanical installation

Mount the transmitter with flange on a nozzle on top of the tank. The transmitter can also be mounted on a threaded connection. Make sure only qualified personnel perform the installation.

Note
If you need to remove the transmitter head from the probe, make sure the process seal is carefully protected from dust and water. See "Removing the transmitter head" on page 110 for further information.

For safety information, see Warnings on page 17.

3.5.1 Tank connection with flange

Figure 3-11. Tank Connection with Flange

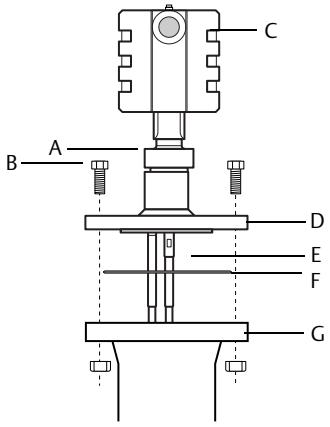

A Nut
B Bolts
C Transmitter head
D Flange
E Probe
F Gasket
G Tank flange

1. Place a gasket on top of the tank flange.
2. Lower the transmitter and probe with flange into the tank.
3. Tighten the bolts.
4. Loosen the nut that connects the transmitter housing to the probe slightly.
5. Rotate the transmitter housing so that the cable entries/display face the desired direction.
6. Tighten the nut.

Note
PTFE covered probes must be handled carefully to prevent damage to the coating.

3.5.2 Tank connection with loose flange (“plate design”)

Figure 3-12. Tank Connection with Loose Flange (“Plate Design”)

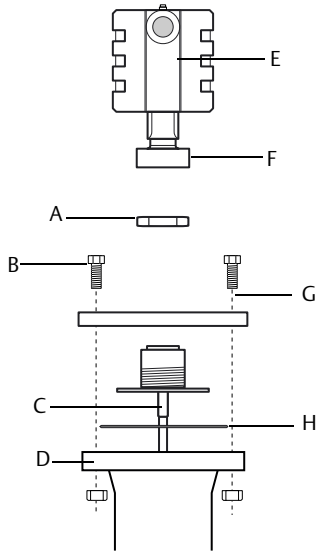

A Flange nut
B Bolts
C Probe
D Tank flange
E Transmitter head
F Nut
G Flange
H Gasket

The transmitter is delivered with head, flange, and probe assembled into one unit. If, for some reason, these parts are disassembled, mount the transmitter as described below:

1. Place a gasket on top of the tank flange.
2. Mount the flange on the probe and tighten the flange nut.
3. Mount the transmitter head.
4. Lower the transmitter and probe with flange into the tank.
5. Tighten the bolts.
6. Loosen the nut that connects the transmitter housing to the probe slightly.
7. Rotate the transmitter housing so that the cable entries/display face the desired direction.
8. Tighten the nut.

Note
PTFE covered probes must be handled carefully to prevent damage to the coating.

3.5.3 Threaded tank connection

Figure 3-13. Threaded Tank Connection

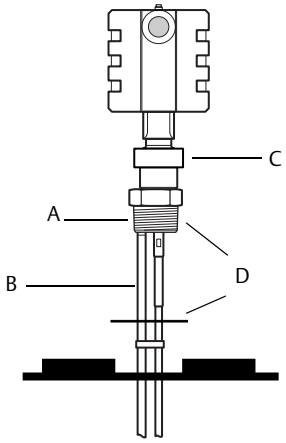

A Tank connection
B Probe
C Nut
D Sealant on threads or gasket (for BSP/G threads)

1. For tank connections with BSP/G threads, place a gasket on top of the tank flange, or use a sealant on the threads of the tank connection.
2. Lower the transmitter and probe into the tank.
3. Screw the adapter into the process connection.
4. Loosen the nut that connects the transmitter housing to the probe slightly.
5. Rotate the transmitter housing so the cable entries/display face the desired direction.
6. Tighten the nut.

Note
For adapters with NPT threads, pressure-tight joints require a sealant.

3.5.4 Tri-Clamp tank connection

Figure 3-14. Tri-Clamp Tank Connection

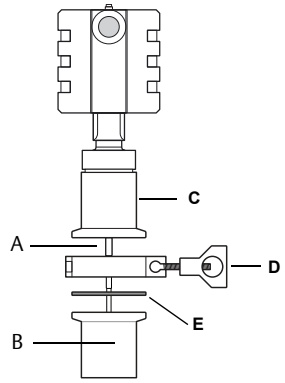

A Probe
B Tank
C Tri-Clamp
D Clamp
E Gasket

1. Place a gasket on top of the tank flange.
2. Lower the transmitter and probe into the tank.
3. Fasten the Tri-Clamp connection to the tank with a clamp.
4. Loosen the nut that connects the transmitter housing to the probe slightly.
5. Rotate the transmitter housing so the cable entries/display face the desired direction.
6. Tighten the nut.

3.5.5 Shortening the probe

Flexible twin/single lead

Note
The PTFE covered probes must not be cut in field.

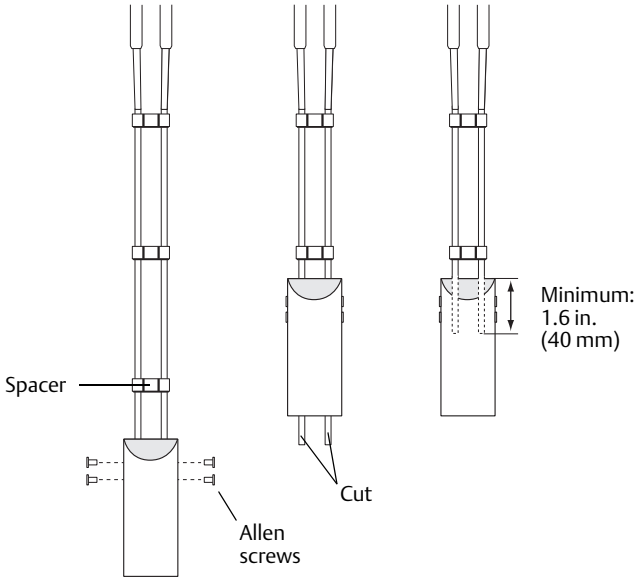

1. Mark off the required probe length. Add at least 1.6 in. (40 mm) to the required probe length to be inserted into the weight.
2. Loosen the Allen screws.
3. Slide the weight upwards as much as needed in order to cut the probe.
4. Cut the probe. The minimum probe length is 3.33 ft (1 m). If necessary, remove a spacer to make room for the weight.
5. Slide the weight down to the required cable length.
6. Tighten the screws.
7. Update the transmitter configuration to the new probe length, see "Probe length" on page 70.

If the weight was removed from the cables when cutting, make sure that at least 1.6 in./40 mm of the cable is inserted when the weight is replaced.

Rigid single lead

1. Cut the single lead probe to the desired length.
2. Update the transmitter configuration to the new probe length, see "Probe length" on page 70.

Note
The PTFE covered probes must not be cut in field.

Rigid twin lead

The spacers are put closer together at the probe end. The maximum amount that can be cut away is related to the ordering length L.

To cut a Rigid Twin Lead probe, do the following:

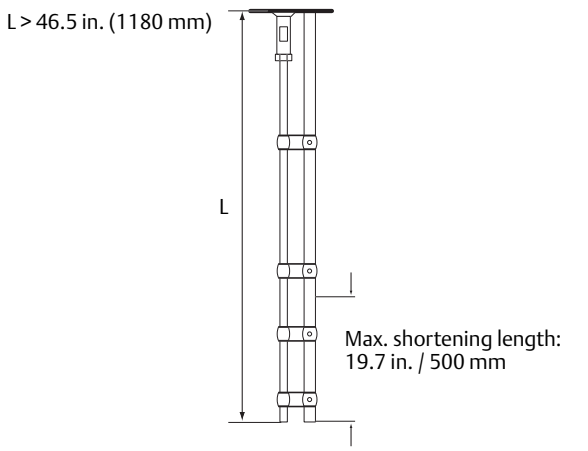

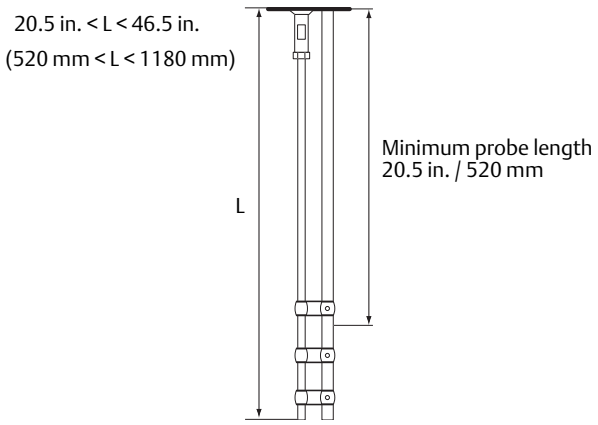

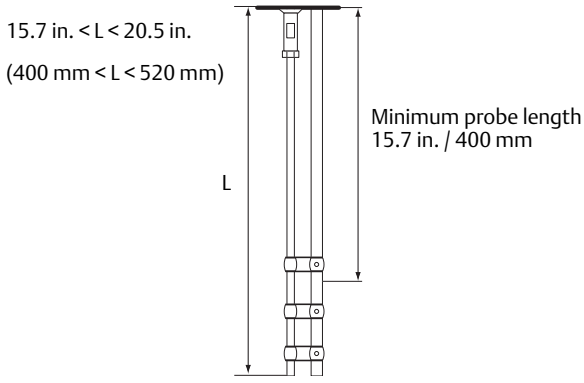

1. Cut the rods to the desired length:
   - You may cut up to 19.7 in. (500 mm) from the probe end for probe length (L) above 46.5 in. (1180 mm).
   - For probe length 20.5 to 46.5 in. (520 to 1180 mm) the minimium length is 20.5 in. (520 mm).
   - For probe length 15.7 to 20.5 in. (400 to 520 mm) the minimium length is 15.7 in. (400 mm).
2. Update the transmitter configuration to the new probe length, see "Probe length" on page 70.

Coaxial

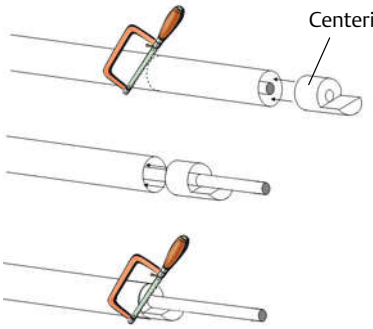

To cut a coaxial probe, do the following:

Note
The HTHP coaxial probe must not be cut in field.

1. Insert the centering piece. **(The centering piece is delivered from factory and should be used to prevent the spacers centering the rod from coming loose).**
2. Cut the tube to the desired length.
3. Move the centering piece.
4. Cut the rod inside the tube. Make sure the rod is fixed with the centering piece while cutting.
   - Pipes longer than 49 in. (1250 mm) can be shortened by as much as 23.6 in. (600 mm).
   - Pipes shorter than 49 in. (1250 mm) can be cut to a minimum length of 15.7 in. (400 mm).

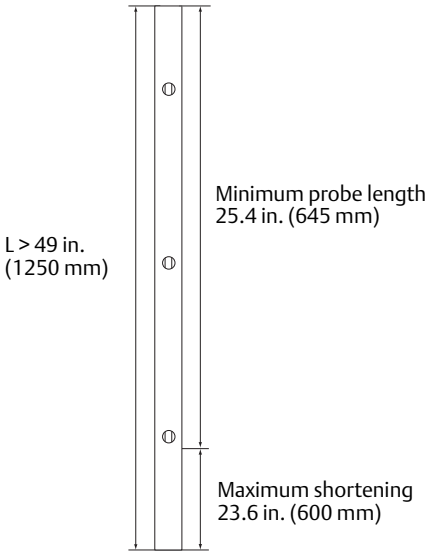

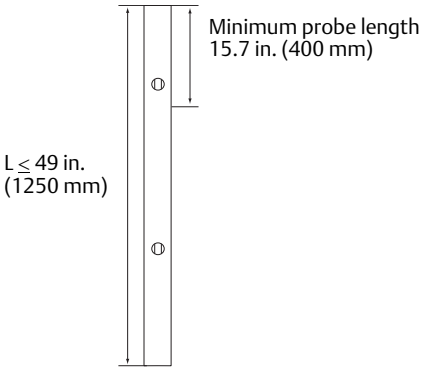

5. Update the transmitter configuration to the new probe length, see "Probe length" on page 70.

3.5.6 Using a segmented probe

Figure 3-15. Segmented Probe Parts

Dimensions are in inches (mm).

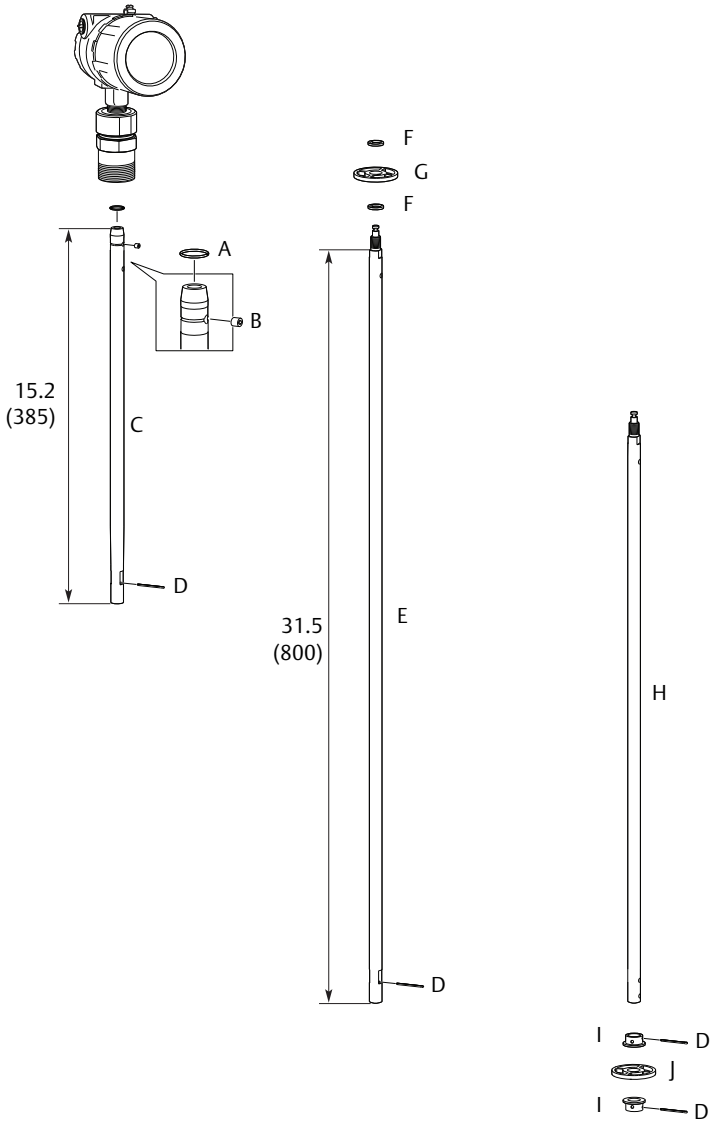

A Safety ring
B Screw
C Top segment
D Split pin
E Middle segment
F PTFE washer (optional)
G Centering disc in PTFE (optional)
H Bottom segment (length varies depending on total probe length)
I Bushing (for the centering disc at the probe end)
J Bottom centering disc in PTFE or Stainless Steel (optional)

Verify probe length

Segmented probe ordered with model code 4S

Before installation, verify the probe length (L) on the label. If the probe length needs to be adjusted, see "Adjusting the probe length" on page 44.

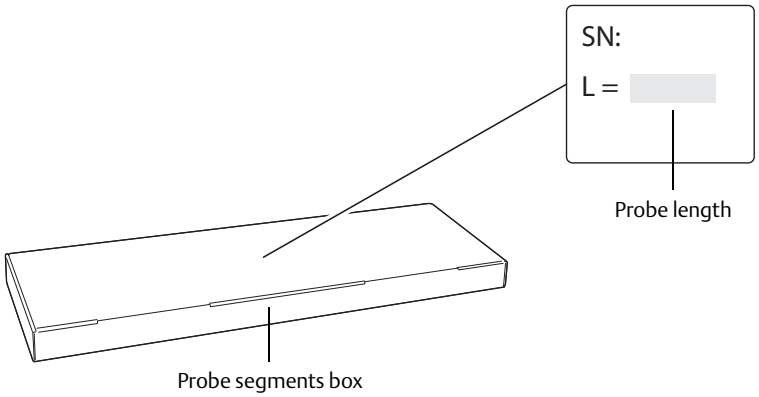

Segmented probe ordered as spare part kit

Before installation, the number of segments that add up to the desired probe length must be determined. Also, the bottom segment may need to be shortened. See "Adjusting the probe length" on page 44.

Assemble the segmented probe

Note
If there is enough space beside the tank, the probe can be assembled before inserting it into the tank.

1. Insert the stop screw to the top segment. Tighten approximately 2 turns.

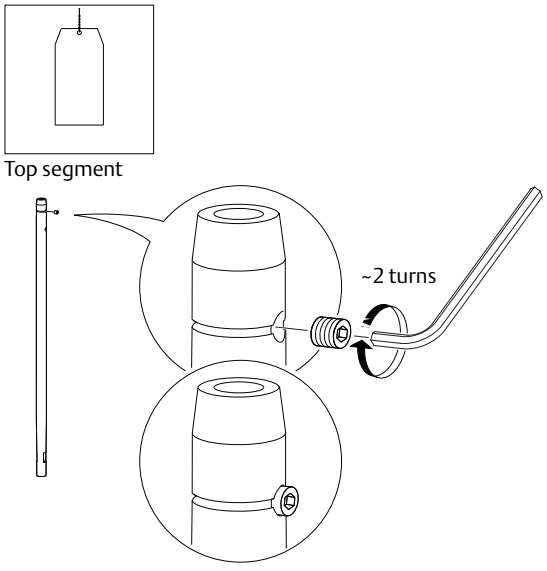

2. Pre-assemble the safety ring.

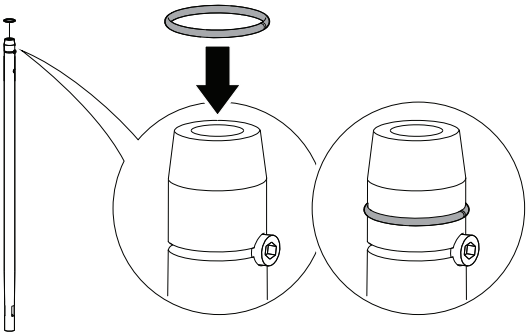

3. **Optional:** If ordered, mount the centering disc on the bottom segment of the probe.

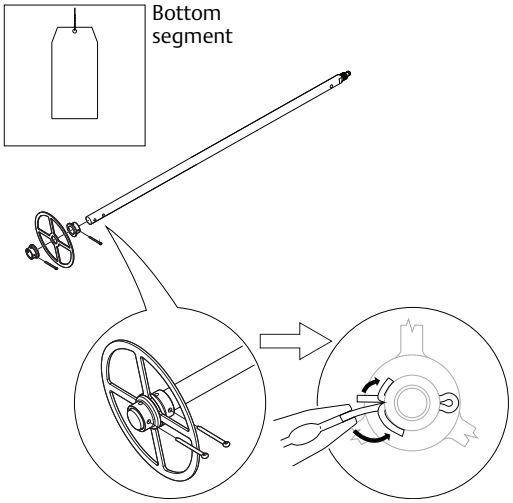

4. Insert the support tool.

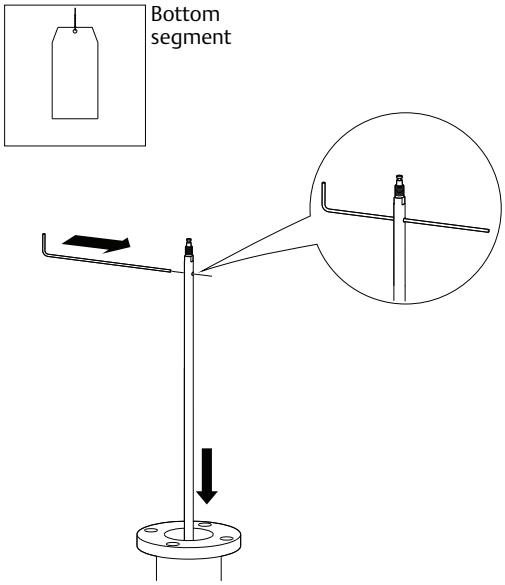

5. **Optional:** If ordered, mount the centering disc.

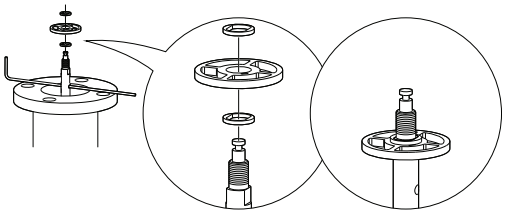

Note

- Maximum five pcs/probe
- Minimum two segments between each centering disc

6. Mount a middle segment.

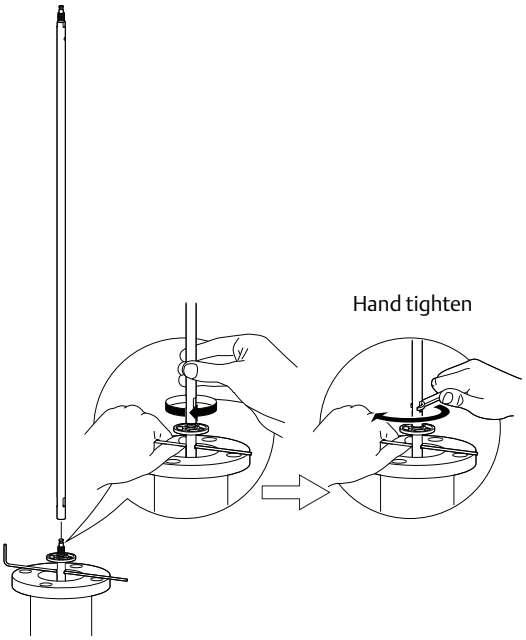

7. Secure the split pin.

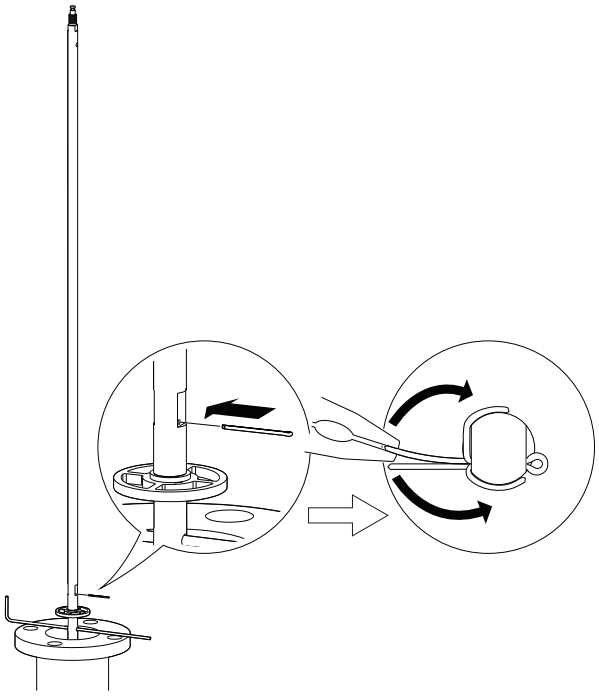

8. Insert the second support tool.

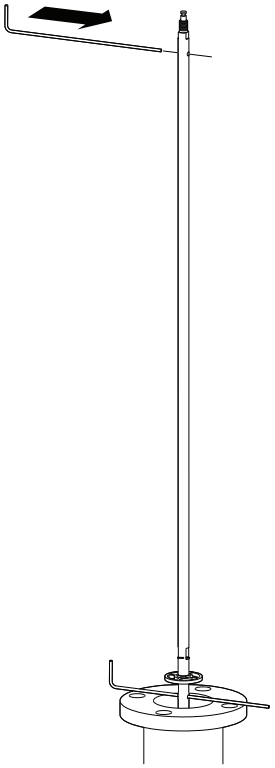

9. Remove the first support tool and lower the probe into the tank.

10. Repeat steps 5 to 9 until all segments are mounted. Make sure to finish with the top segment of the probe.

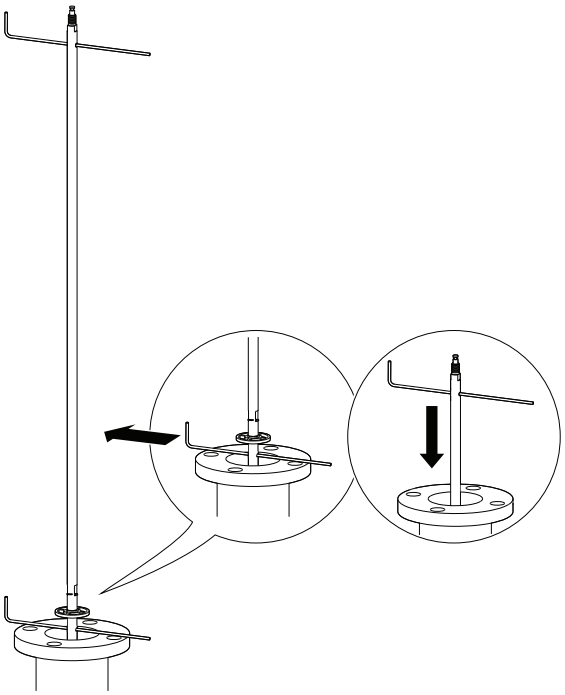

11. Seal and protect threads.

⚠ Only for NPT threaded tank connection.

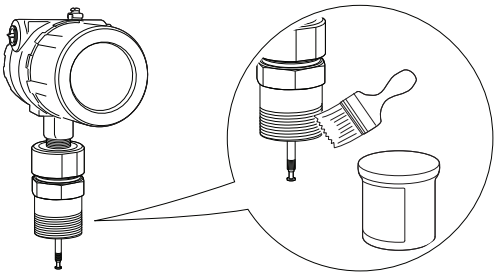

Note
Use anti-seize paste or PTFE tape according to your site procedures.

12. Attach the probe to the device.

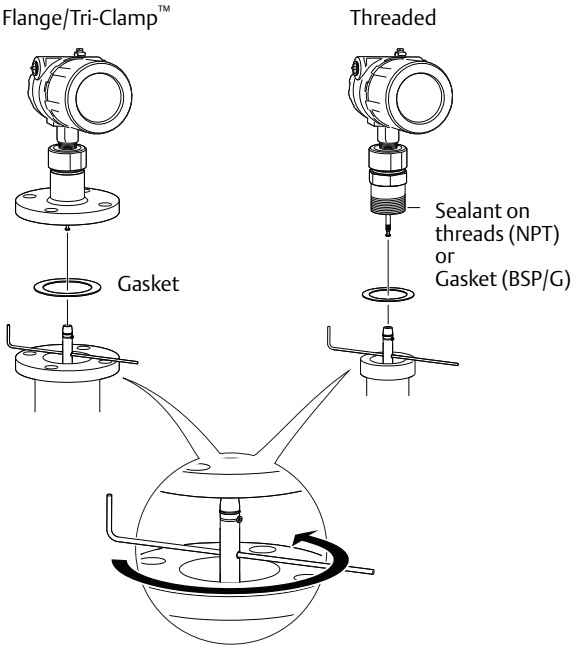

Note
For safety reasons, at least two people are needed when mounting the device.

Make sure to hold the device above the tank. High loads can break the support tool.

13. Tighten the stop screw and slide the safety ring into the groove.

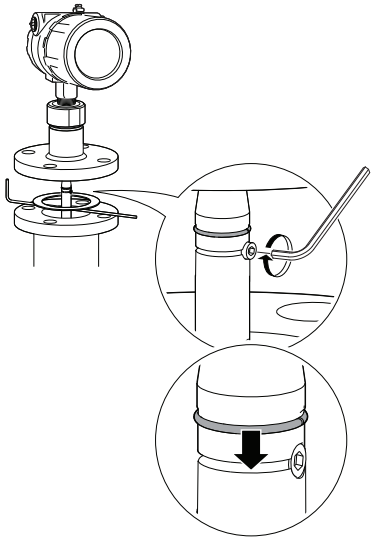

14. Remove the support tool.

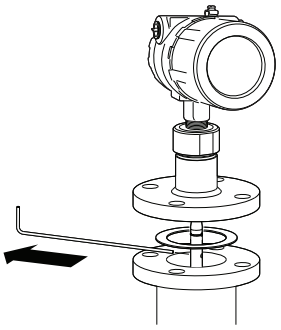

15. Mount the device on the tank.

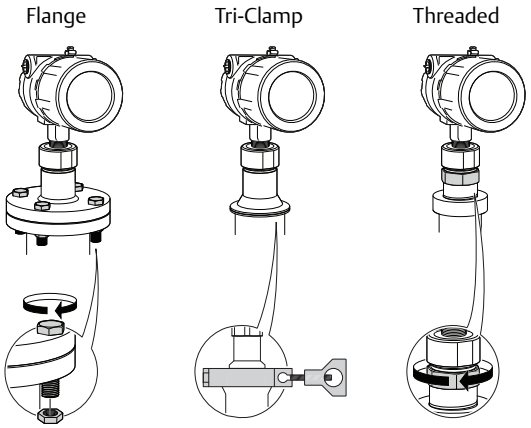

16. Rotate the housing to the desired direction.

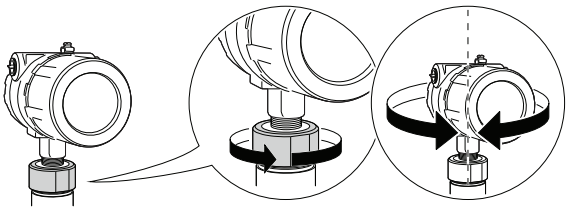

17. Tighten the nut. The torque must be 30 Lbft (40 Nm).

18. Connect the wiring.

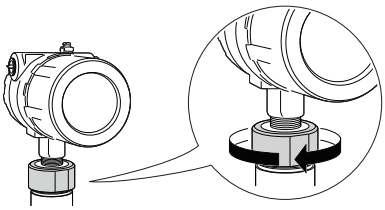

For further instructions, see the Rosemount 3300 Series Quick Start Guide (document number 00825-0100-4811).

3.5.7 Adjusting the probe length

1. Determine *L*, the desired probe length.

L, desired probe length:

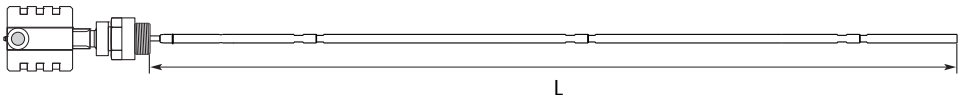

2. Determine *n*, the number of middle segments needed for the desired probe length. See Table 3-7 and Table 3-8 on page 46.

n, number of middle segments:

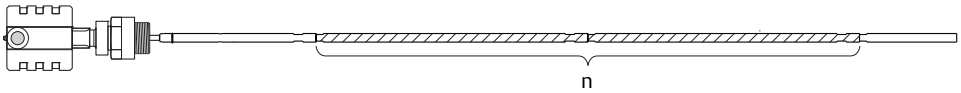

3. Calculate *Y*, the length of the bottom segment. See Table 3-7 and Table 3-8 on page 46.

Y, length of bottom segment:

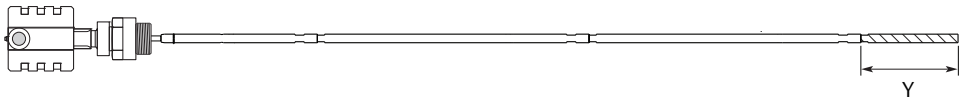

4. Continue as follows:

Length of bottom segment (Y)	Action
 Y < 0.4 in. (10 mm)	■ Continue with step (7). Do not use the bottom segment.
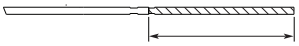 Y ≥ 0.4 in. (10 mm)	■ Continue with step (5) and cut the bottom segment.
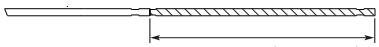 Y = 31.5 in. (800 mm)	1. Add one extra middle segment to the calculated *n*. 2. Continue with step (7).

5. Mark where to cut the bottom segment.

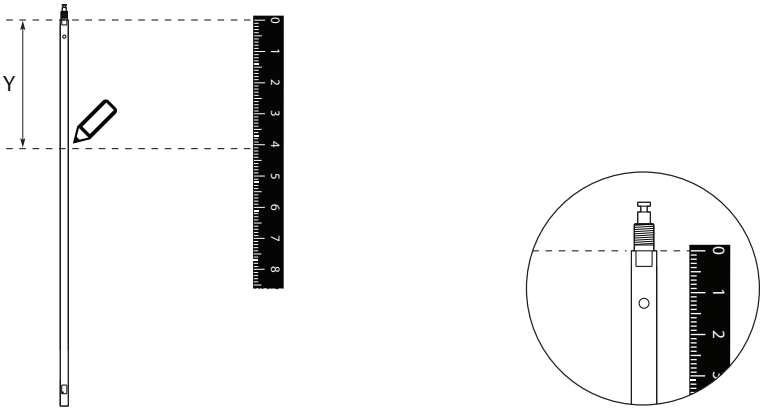

6. Cut the bottom segment at the mark.

Note
Make sure the bottom segment is fixed while cutting.

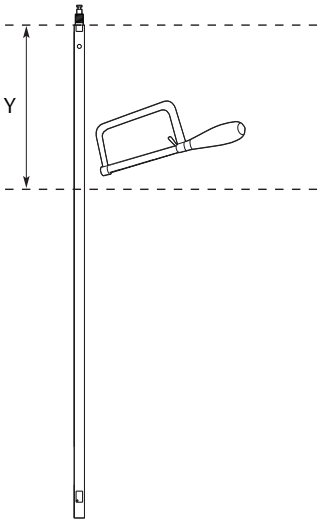

7. **Optional:** If a bottom centering disc is ordered, then drill two holes on the bottom segment using the drilling fixture.

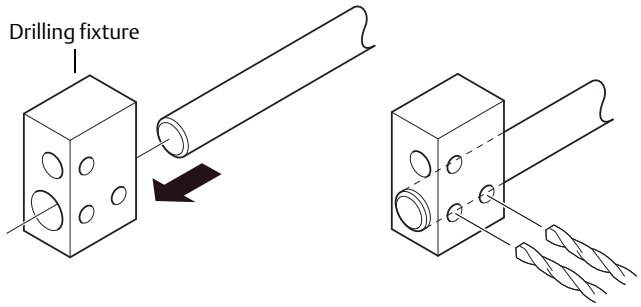

Table 3-7. Determination of Probe Segments for Standard Seal

Desired probe length (L)(1)		Number of middle segments (n)	Length of bottom segment (Y)	
in.	mm		in.	mm
15.8 ≤ L ≤ 47.2	400 ≤ L ≤ 1200	0 pc	Y = L -15.8	Y = L - 400
47.2 < L ≤ 78.7	1200 < L ≤ 2000	1 pc	Y = L - 47.2	Y = L - 1200
78.7 < L ≤ 110.2	2000 < L ≤ 2800	2 pcs	Y = L - 78.7	Y = L - 2000
110.2 < L ≤ 141.7	2800 < L ≤ 3600	3 pcs	Y = L - 110.2	Y = L - 2800
141.7 < L ≤ 173.2	3600 < L ≤ 4400	4 pcs	Y = L - 141.7	Y = L - 3600
173.2 < L ≤ 204.7	4400 < L ≤ 5200	5 pcs	Y = L - 173.2	Y = L - 4400
204.7 < L ≤ 236.2	5200 < L ≤ 6000	6 pcs	Y = L - 204.7	Y = L - 5200
236.2 < L ≤ 267.7	6000 < L ≤ 6800	7 pcs	Y = L - 236.2	Y = L - 6000
267.7 < L ≤ 299.2	6800 < L ≤ 7600	8 pcs	Y = L - 267.7	Y = L - 6800
299.2 < L ≤ 330.7	7600 < L ≤ 8400	9 pcs	Y = L - 299.2	Y = L - 7600
330.7 < L ≤ 362.2	8400 < L ≤ 9200	10 pcs	Y = L - 330.7	Y = L - 8400
362.2 < L ≤ 393.7	9200 < L ≤ 10000	11 pcs	Y = L - 362.2	Y = L - 9200

(1) Maximum probe length is 19 ft 8 in. (6 m) for the Rosemount 3300 Series.

Table 3-8. Determination of Probe Segments for HTHP/HP/C Seal

Desired probe length (L)(1)		Number of middle segments (n)	Length of bottom segment (Y)	
in.	mm		in.	mm
17.3 ≤ L ≤ 48.8	440 ≤ L ≤ 1240	0 pc	Y = L - 17.3	Y = L - 440
48.8 < L ≤ 80.3	1240 < L ≤ 2040	1 pc	Y = L - 48.8	Y = L - 1240
80.3 < L ≤ 111.8	2040 < L ≤ 2840	2 pcs	Y = L - 80.3	Y = L - 2040
111.8 < L ≤ 143.3	2840 < L ≤ 3640	3 pcs	Y = L - 111.8	Y = L - 2840
143.3 < L ≤ 174.8	3640 < L ≤ 4440	4 pcs	Y = L - 143.3	Y = L - 3640
174.8 < L ≤ 206.3	4440 < L ≤ 5240	5 pcs	Y = L - 174.8	Y = L - 4440
206.3 < L ≤ 237.8	5240 < L ≤ 6040	6 pcs	Y = L - 206.3	Y = L - 5240
237.8 < L ≤ 269.3	6040 < L ≤ 6840	7 pcs	Y = L - 237.8	Y = L - 6040
269.3 < L ≤ 300.8	6840 < L ≤ 7640	8 pcs	Y = L - 269.3	Y = L - 6840
300.8 < L ≤ 332.3	7640 < L ≤ 8440	9 pcs	Y = L - 300.8	Y = L - 7640
332.3 < L ≤ 363.8	8440 < L ≤ 9240	10 pcs	Y = L - 332.3	Y = L - 8440
363.8 < L ≤ 393.7	9240 < L ≤ 10000	11 pcs	Y = L - 363.8	Y = L - 9240

(1) Maximum probe length is 19 ft 8 in. (6 m) for the Rosemount 3300 Series.

3.5.8 Anchoring

In turbulent tanks, it may be necessary to fix the probe. Depending on the probe type, different methods can be used to guide the probe to the tank bottom. This may be needed to prevent the probe from hitting the tank wall or other objects in the tank, as well as preventing a probe from breaking.

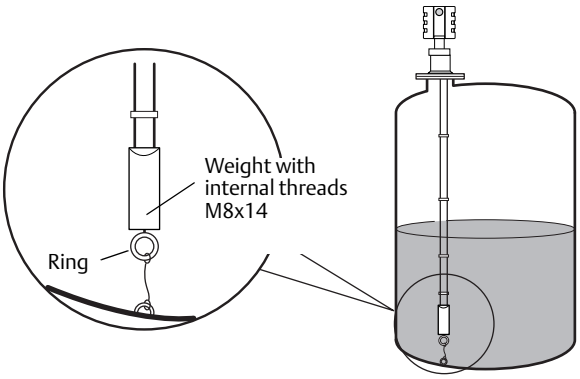

Flexible twin/single lead probe with weight and ring

A ring (customer supplied) can be attached to the weight in a threaded (M8x14) hole at the end of the weight. Attach the ring to a suitable anchoring point.

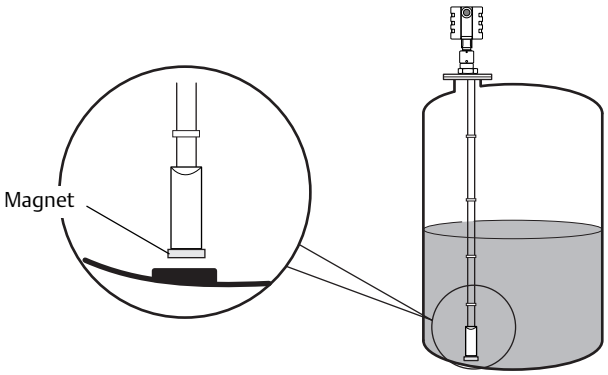

Flexible twin/single lead probe with weight and magnet

A magnet (customer supplied) can be fastened in a threaded (M8x14) hole at the end of the weight. The probe can then be guided by placing a suitable metal plate beneath the magnet.

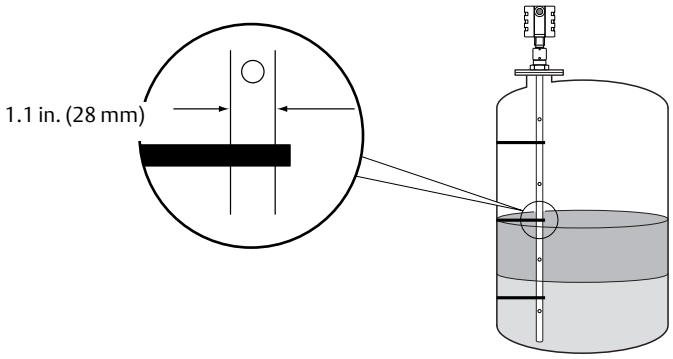

Coaxial probe fixed to the tank wall

The coaxial probe can be guided to the tank wall by fixtures fastened to the tank wall. Fixtures are customer supplied. Make sure the probe can move freely due to thermal expansion without getting stuck in the fixture.

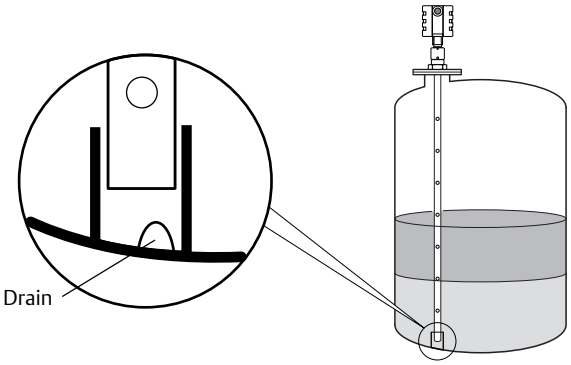

Coaxial probe

The coaxial probe can be guided by a tube welded on the tank bottom. Tubes are customer supplied. Make sure the probe can move freely in order to handle thermal expansion.

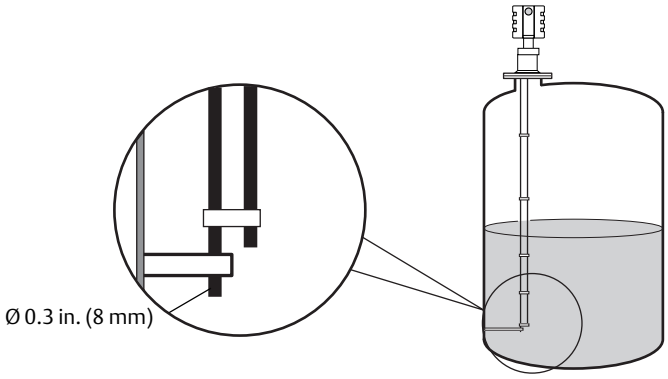

Rigid twin lead probe

The Rigid Twin Lead probe can be secured to the tank wall by cutting the center rod and putting a fixture at the end of the outer rod.

The fixture is customer supplied. Make sure the probe is only guided and not fastened in the fixture to be able to move freely for thermal expansion.

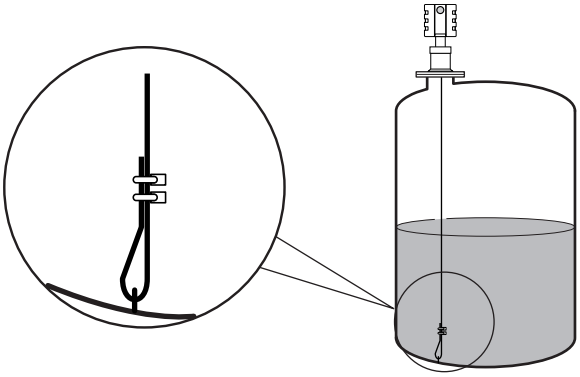

Flexible single lead probe

The probe rope itself can be used for anchoring. Pull the probe rope through a suitable anchoring point, for example a welded eye, and fasten it with two clamps.

The length of the loop will add to the transition zone.The location of the clamps will determine the beginning of the transition zone. The probe length should be configured as the length from the underside of the flange to the top clamp. See section “Transition zones” on page 16 for further information on Transition Zones.

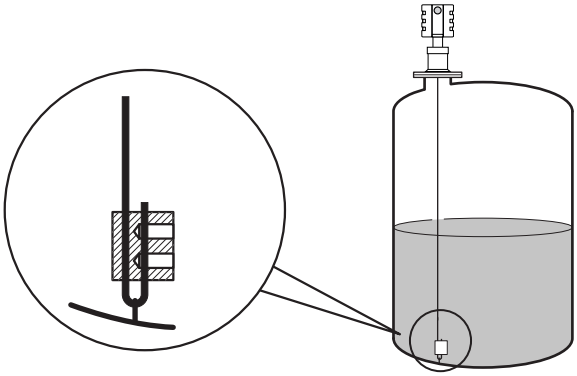

Alternative chuck for flexible single lead probes

Loosen the screws. Pull the probe rope through a suitable anchoring point, for example a welded-eye.

Tighten the screws. The required torque and hex key dimensions:
4 mm wire: 15 Nm, 4 mm
6 mm wire: 25 Nm, 5 mm

3.5.9 Mounting a centering disc for pipe installations

Flexible single/twin lead probe

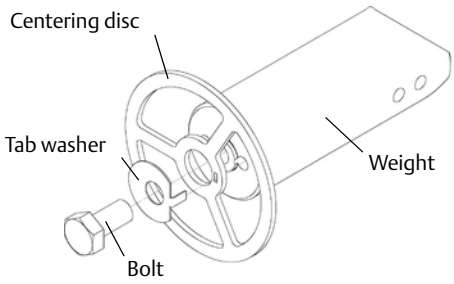

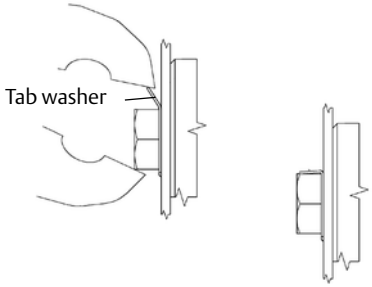

1. Mount the centering disc at the end of the weight.
2. Make sure the tab washer is properly inserted in the centering disc.
3. Fasten the centering disc with the bolt.
4. Secure the bolt by folding the tab washer.

Note
Centering discs made of PTFE must not be used with the Rosemount 3300 Series HTHP version.

Rigid single lead probe (8 mm)

1. Drill one hole using the drilling fixture (included in your shipment).

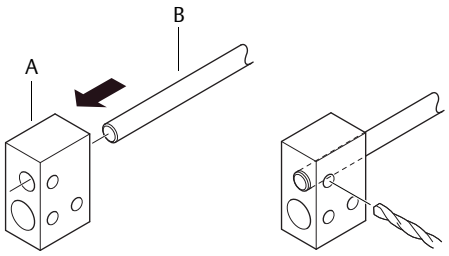

A Drilling fixture
B Probe

2. Mount the bushing, centering disc, and washer at the probe end.

Note
The washer should not be mounted if the disc material is C-276, Alloy 400, or PTFE.

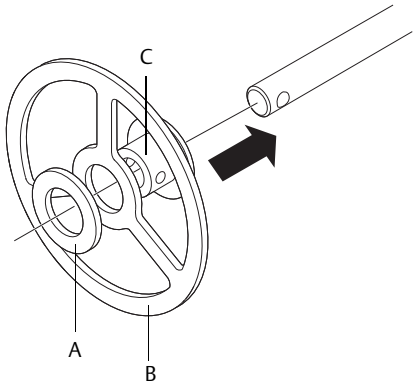

A Washer
B Centering disc
C Bushing

3. Insert the split pin through the bushing and the probe.

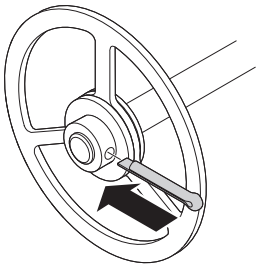

4. Secure the split pin.

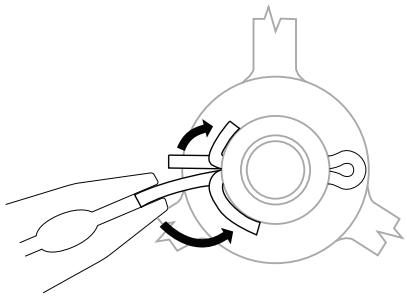

Note
Centering discs may not be used with PTFE-covered probes.

Rigid single lead/segmented rigid single lead probe (13 mm)

1. Drill two holes using the drilling fixture (included in your shipment).

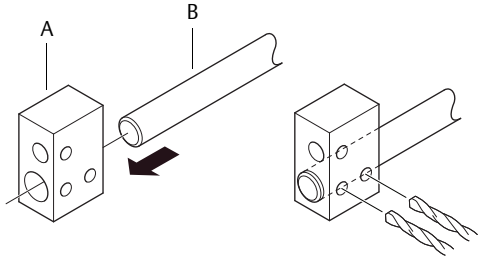

A Drilling fixture
B Probe

2. Mount the bushings and centering disc at the probe end.

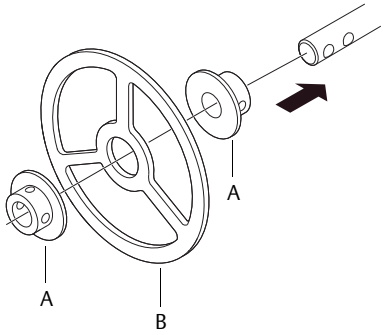

A Bushing
B Centering disc

3. Adjust distance by shifting hole for split pin in lower bushing.

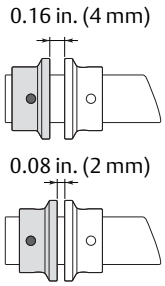

4. Insert the split pins through the bushings and the probe.

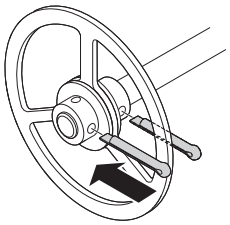

5. Secure the split pins.

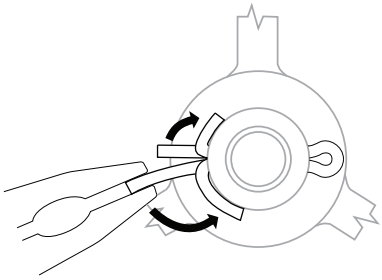

3.6 Electrical installation

3.6.1 Cable/conduit entries

The electronics housing has two entries for ½ - 14 NPT. Optional M20×1.5 and PG 13.5 adapters are also available. The connections are made in accordance with local or plant electrical codes.

Make sure unused ports are properly sealed to prevent moisture or other contamination from entering the terminal block compartment of the electronics housing.

Note
Remove any orange caps that may be attached. Use the enclosed metal plug to seal the unused port.

3.6.2 Grounding

The housing should always be grounded in accordance with national and local electrical codes. Failure to do so may impair the protection provided by the equipment. The most effective grounding method is direct connection to earth ground with minimal impedance. There are

two grounding screw connections provided. One is inside the Field Terminal side of the housing and the other is located on top of the housing. The internal ground screw is identified by a ground symbol: ⏚.

Note
Grounding the transmitter via threaded conduit connection may not provide sufficient ground.

Note
In the Explosion-proof/Flameproof version the electronics is grounded via the transmitter housing. After installation and commissioning make sure that no ground currents exist due to high ground potential differences in the installation.

3.6.3 Cable selection

Use shielded twisted pair wiring for the Rosemount 3300 Series in order to comply with EMC regulations. The cables must be suitable for the supply voltage and approved for use in hazardous areas, where applicable. For instance, in the U.S., explosion-proof conduits must be used in the vicinity of the vessel. For the ATEX flameproof approval version of the Rosemount 3300 Series, suitable conduits with sealing device or flameproof (EEx d) cable glands must be used depending on local requirements.

Use 18 AWG to 12 AWG in order to minimize the voltage drop to the transmitter.

3.6.4 Hazardous areas

When the Rosemount 3300 Series Transmitter is installed in hazardous areas, local regulations and specifications in applicable certificates must be observed.

3.6.5 HART

Power requirements

Terminals in the transmitter housing provide connections for signal cables.

The Rosemount 3300 Series Transmitter is loop-powered and operates with power supplies ranging from 11 to 42 Vdc. For Intrinsically Safe output, the supply voltage must be within 11 to 30 Vdc. For explosion-proof/flameproof the supply voltage must be within 16 and 42 Vdc.

Maximum loop resistance

The maximum current loop resistance can be gained from the following diagrams:

Figure 3-16. Explosion-Proof /Flameproof Installations

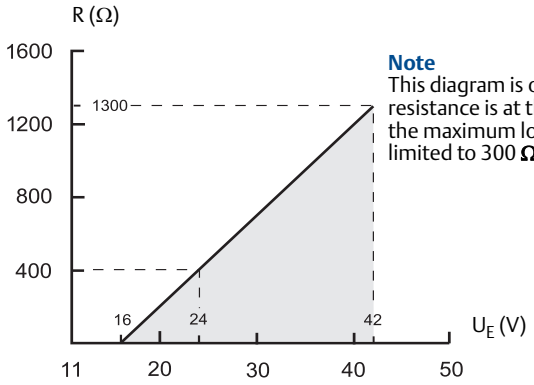

Note
This diagram is only valid if the load resistance is at the + side, otherwise the maximum load resistance is limited to 300 Ω.

Figure 3-17. Non-Hazardous Installations

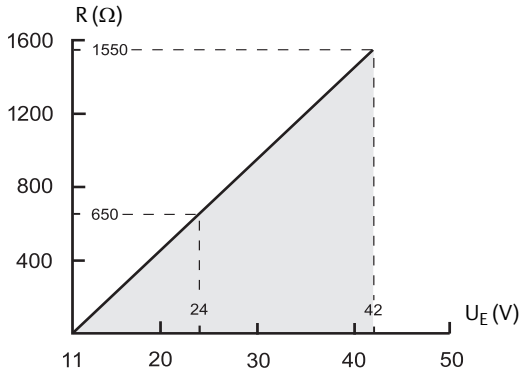

Figure 3-18. Intrinsically Safe Installations

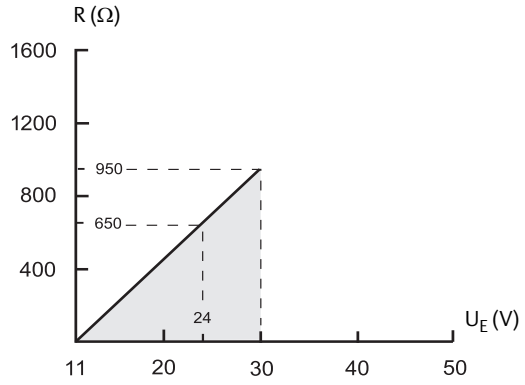

Connecting the transmitter

The Rosemount 3300 Series is a two-wire loop powered transmitter accepting power supplies ranging from 11 Vdc to 42 Vdc. It uses 4-20 mA power superimposed with a HART signal.

To connect the transmitter:

1. Make sure the power supply is disconnected.
2. Remove the cover on the transmitter housing terminal side (see label).

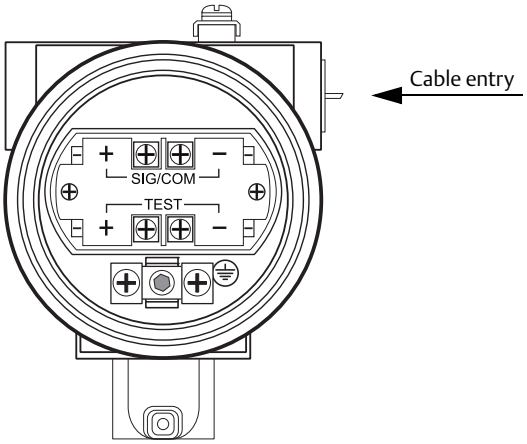

3. Pull the cable through the cable gland/conduit.
4. Connect wires according to Figure 3-19 on page 56 for non-intrinsically safe output and according to Figure 3-20 on page 57 for Intrinsically safe output. Make sure the transmitter housing is grounded (see "Grounding" on page 52).
5. Replace the cover, tighten the cable gland, and connect the power supply.

Non-intrinsically safe output

For non-intrinsically safe installations, wire the transmitter as shown in Figure 3-19.

Note
Make sure the power supply is off when connecting the transmitter.

Figure 3-19. Wiring Diagram for Non-Intrinsically Safe Installations

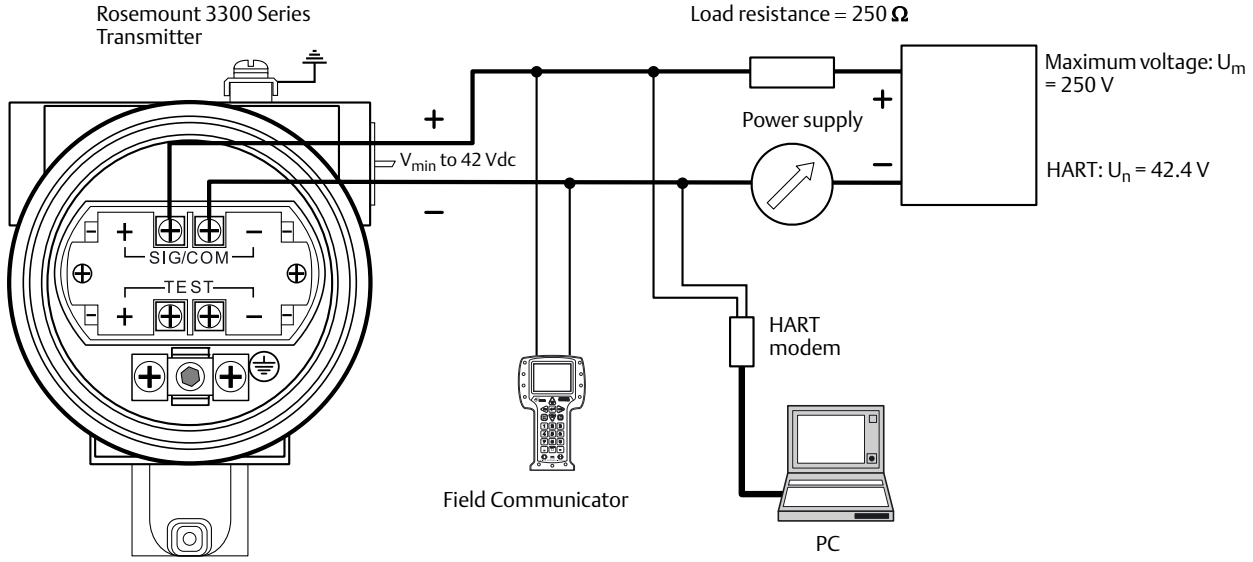

Note
Rosemount 3300 Series Transmitters with Flameproof/Explosion-proof HART Output have a built-in barrier; no external barrier needed.

For HART communication, a minimum load resistance of 250 Ω within the loop is required. For maximum load resistance, see Figure 3-16 (Explosion-proof/Flameproof) and Figure 3-17 on page 54 (Non-hazardous installations).

The power supply voltage ranges from V_{min} Vdc to 42 Vdc, where V_{min} is the minimum voltage given by:

11 V	Non-hazardous locations certification
16 V	Explosion-proof/flameproof certification

For Explosion-proof/Flameproof applications, the resistance between the negative terminal on the transmitter and the power supply must not exceed 300 Ω.

Note
EEx d version: If there is a risk for a difference in voltage potential between transmitter ground and power supply ground, a galvanic isolator is required.

Intrinsically safe output

For intrinsically safe installations wire the transmitter as shown in Figure 3-20.

Note
Make sure the instruments in the loop are installed in accordance with intrinsically safe field wiring practices and system control drawings when applicable.

Figure 3-20. Wiring Diagram for Intrinsically Safe Installations

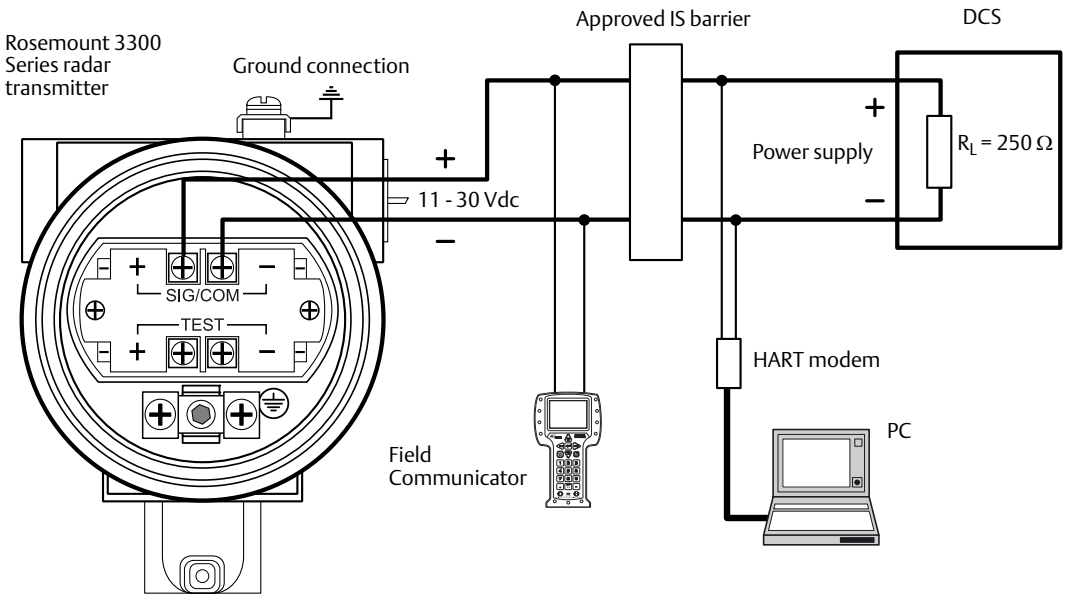

For HART communication, a minimum load resistance of 250 Ω within the loop is required. For maximum load resistance, see Figure 3-18 on page 54.

The power supply voltage ranges from 11 V to 30 V.

IS parameters

U_i = 30 V
I_i = 130 mA
P_i = 1 W
C_i = 0
L_i = 0

3.6.6 HART to Modbus Converter (HMC)

For detailed information on requirements and installation guidelines of the HMC module, see "Rosemount 3300 Series with HART® to Modbus® Converter" on page 177.

3.7 Optional devices

3.7.1 Tri-Loop™

The Rosemount 3300 Series Transmitter outputs a HART signal with four process variables. By using the Model 333 HART Tri-Loop up to three additional analog 4-20 mA outputs are provided.

Figure 3-21. Wiring Diagram for HART Tri-Loop

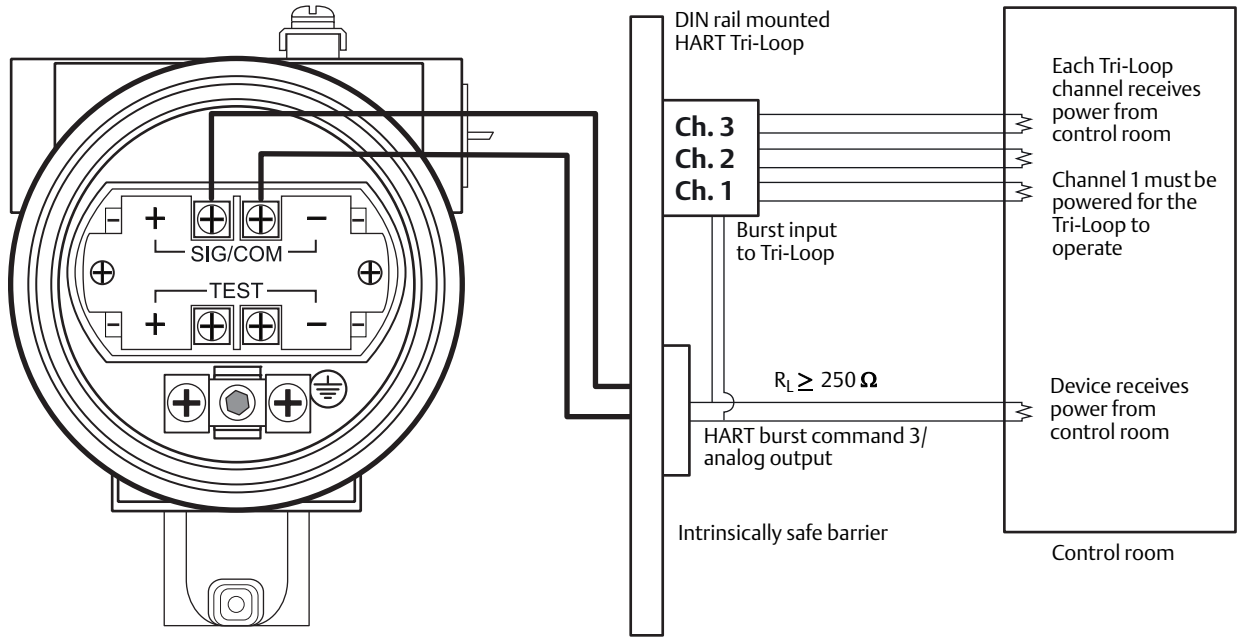

Configure Channels 1, 2, and 3 to reflect the units as well as Upper Range Values and Lower Range Values for your secondary, tertiary, and fourth variables (variable assignment is configured in the Rosemount 3300 Series). It is also possible to enable or disable a channel from this menu. See "Special functions" on page 87 for further information on how to install a Tri-Loop.

3.7.2 Using more than one transmitter on the bus

The Rosemount 3300 Series Transmitter can be run in multidrop mode. In the multidrop mode, each transmitter has a unique HART address.

Figure 3-22. Multidrop Connection

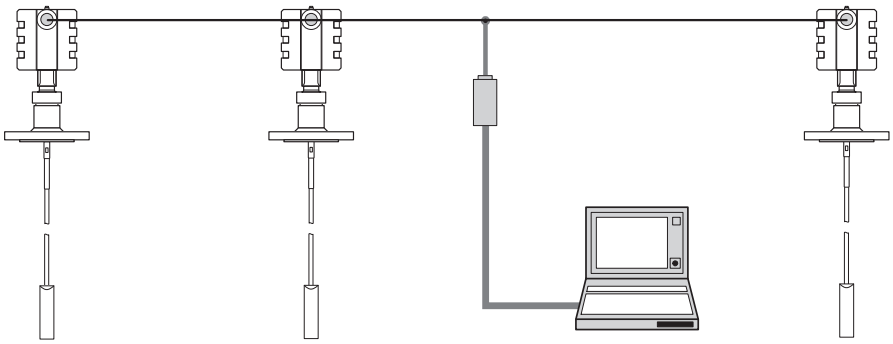

The poll address can be changed by using a Field Communicator or by using the Rosemount Configuration Tools software.

To change the poll address using a Field Communicator, select HART command [1, 4, 5, 2, 1].

To change the poll address using the Rosemount Configuration Tools (RCT) software, do the following:

1. Select the **View** > **Device Commands** option.
   or
   select the **Device Commands** icon from the Project Bar **Advanced** section.

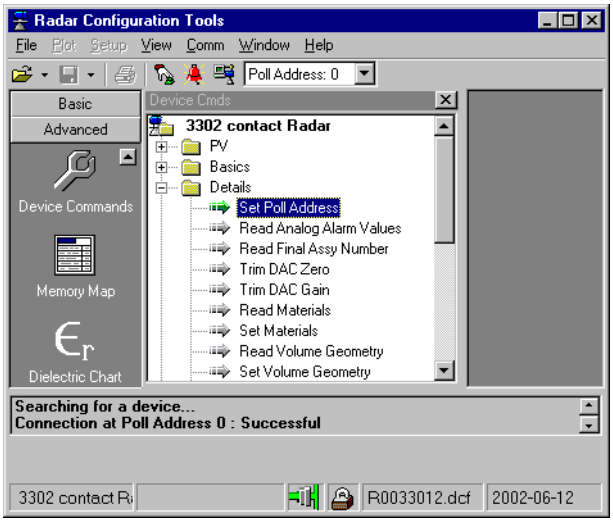

2. Open the **Details** folder.
3. Select the **Set Poll Address** option.
4. Set the desired address.

3.7.3 751 Field Signal Indicator

Figure 3-23. Wiring Diagram for the Rosemount 3300 Series Transmitter with 751 Field Signal Indicator

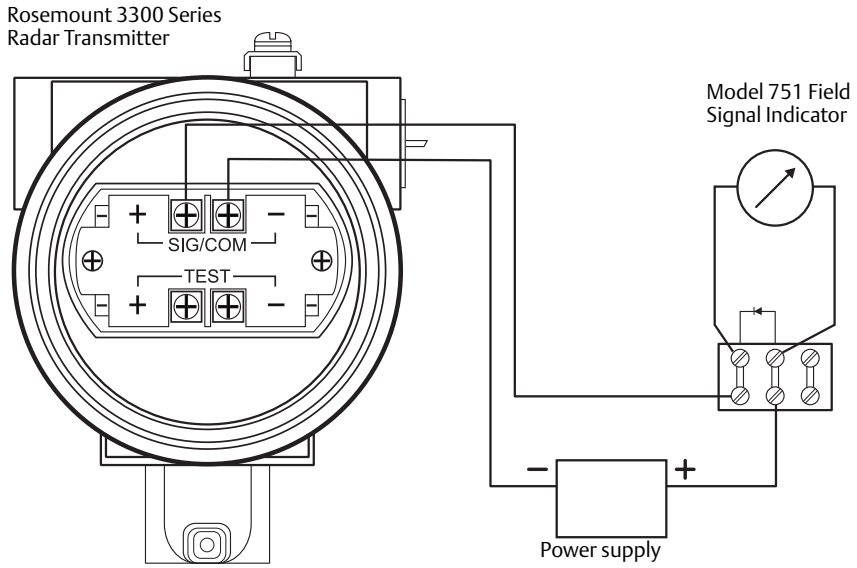

Figure 3-24. Alternative Wiring Diagram for the Rosemount 3300 Series Transmitter with 751 Field Signal Indicator

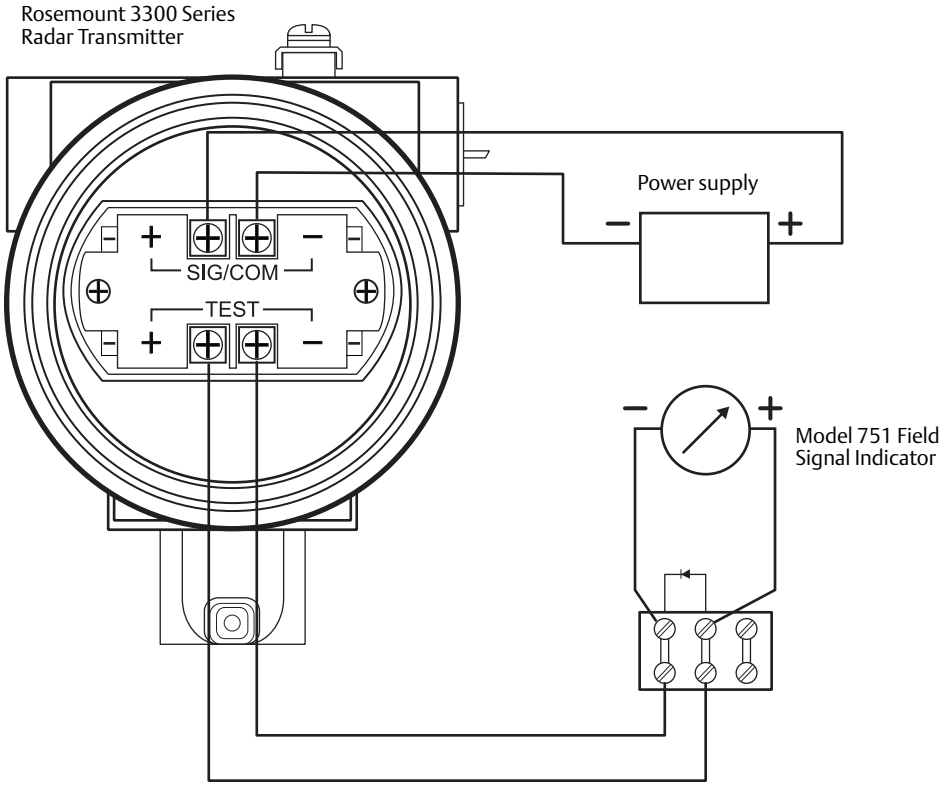

Section 4 Basic Configuration/Start-Up

Safety messages 61
Configuration parameters 62
Configuration using a Field Communicator 67
Basic configuration 69
Volume configuration 74
Configuration using the Radar Configuration Tool 75
Special functions 87

4.1 Safety messages

Procedures and instructions in this section may require special precautions to ensure the safety of the personnel performing the operations. Information that raises potential safety issues is indicated by a warning symbol (⚠). Refer to the safety messages listed at the beginning of each section before performing an operation preceded by this symbol.

⚠ WARNING

Failure to follow safe installation and servicing guidelines could result in death or serious injury.

- Make sure only qualified personnel perform the installation.
- Use the equipment only as specified in this manual. Failure to do so may impair the protection provided by the equipment.
- Do not perform any service other than those contained in this manual unless you are qualified.

4.2 Configuration parameters

The Rosemount 3301 Transmitter can be configured for level and volume measurements. The Rosemount 3302 is designed to measure interface level and interface distance as well.

The Rosemount 3300 Series Transmitters can be pre-configured according to the ordering specifications in the Configuration Data Sheet.

4.2.1 Basic configuration

The basic transmitter configuration includes setting the tank geometry parameters. For interface measurements, the dielectric constant of the top liquid must also be given. For some applications with heavy vapor, the vapor dielectric must be given as well.

Figure 4-1. Tank Geometry

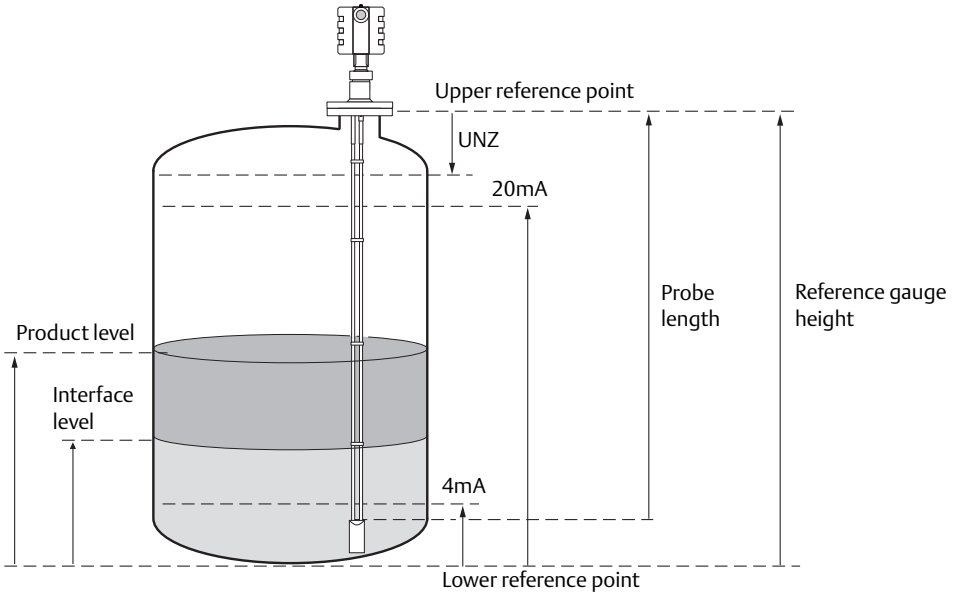

For the different tank connections, the upper reference point is located at the underside of the threaded adapter or at the underside of the welded flange, as illustrated in Figure 4-2:

Figure 4-2. Upper Reference Point

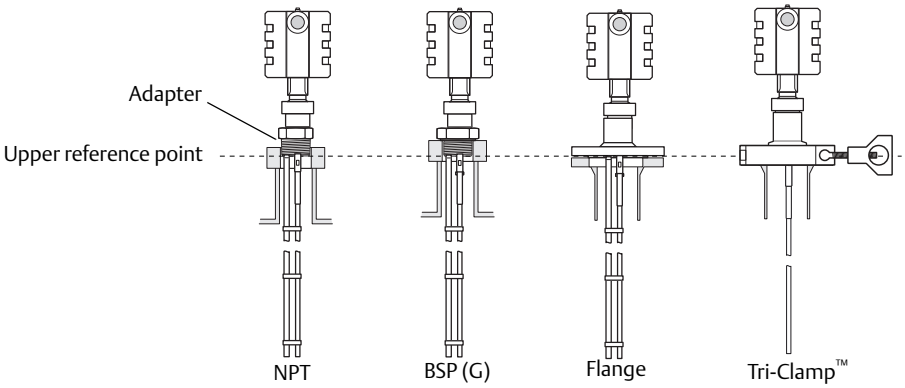

Reference gauge height

The reference gauge height is the distance from the upper reference point to the bottom of the tank. The transmitter measures the distance to the product surface and subtracts this value from the reference gauge height to determine the level.

Probe length

The probe length is the distance between the upper reference point and the end of the probe. If a weight is used at the end of the probe it should not be included.

For flexible single lead probes anchored with clamps, the probe length should be configured as the distance between the underside of the flange and the upper clamp (see Using a segmented probe on page 36).

This parameter is pre-configured at factory. It must be changed if the probe is shortened.

Probe type

The transmitter is designed to optimize measurement performance for each probe type.

This parameter is pre-configured at factory. This value needs to be changed if the probe type is changed.

Flexible and rigid probes require different radar electronics and cannot be used with the same transmitter head.

Dielectric constant of upper product

For interface measurements, the dielectric constant of the upper product is essential to obtain good accuracy. See Interface on page 12 for further information on dielectric constants.

If the dielectric constant of the lower product is significantly smaller than the dielectric constant of water, you may need to make special adjustments. See Interface measurements for semi-transparent bottom products on page 96 for further information.

For level measurements, the Upper Product Dielectric parameter corresponds to the actual dielectric constant of the product in the tank. Normally, this parameter does not need to be changed even if the actual dielectric constant of the product deviates from the Upper Product Dielectric parameter value. However, for some products, measurement performance can be optimized by setting the proper product dielectric constant.

Dielectric constant of vapor

In some applications, there is heavy vapor above the product surface having a significant influence on the level measurement. In such cases, the vapor dielectric can be entered to compensate for this effect.

The default value is equal to 1 which corresponds to the dielectricity of vacuum. Normally, this value does not need to be changed since the effect on measurement performance is very small for most vapors.

Upper null zone

This parameter should only be changed if there are measurement problems in the upper part of the tank. Such problems may occur if there are disturbing objects close to the probe. By setting the Upper Null Zone (UNZ), the measuring range is reduced. See Disturbances at the top of the tank on page 102 for further information.

Note
Measurements are not performed within the UNZ.

4 mA point

The 4 mA point must be set above the lower transition zone (see Transition zones on page 16). If the 4 mA point is set to a point within the transition zone or below the probe end, the full range of the analog output is not used.

20 mA point

Make sure the 20 mA point is below the upper null zone.

The 20 mA point must be set below the upper transition zone (see Transition zones on page 16). If the 20 mA point is set to a point within the transition zone, the full range of the analog output is not used.

Probe angle

If the transmitter is not mounted vertically, the angle from the vertical position must be given.

4.2.2 Volume configuration

For volume calculations, you can select one of the standard tank shapes or the strapping option. Select **None** if volume calculation is not used.

Tank type

You can select one of the following options:

- Strap table
- Vertical cylinder
- Horizontal cylinder
- Vertical bullet
- Horizontal bullet
- Sphere
- None

Strapping table

Use a strapping table if a standard tank type does not provide sufficient accuracy. Use most of the strapping points in regions where the tank shape is non-linear. A maximum of 10 points can be added to the strapping table.

Figure 4-3. Strapping Points

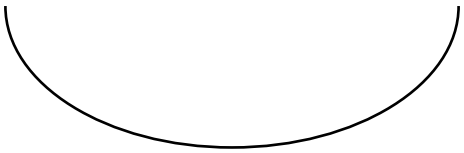

Actual tank bottom may look like this.

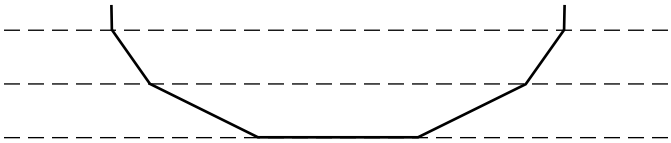

Using only 3 strapping points results in a level-to-volume profile that is more angular than the actual shape.

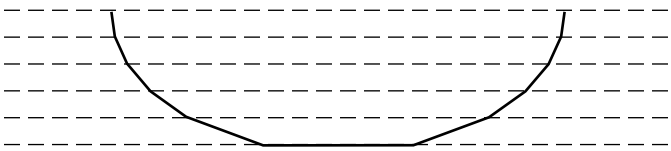

Using 6 of the points at the bottom of the tank yields a level-to-volume profile that is similar to the actual tank bottom.

Standard tank shapes

Figure 4-4. Standard Tank Shapes

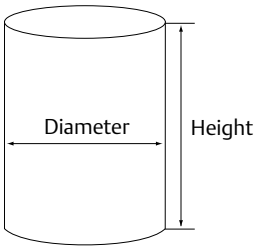

Vertical cylinder

Vertical cylinder tanks are specified by diameter and height.

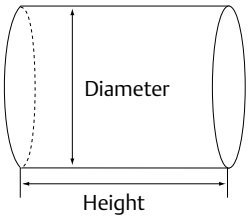

Horizontal cylinder

Horizontal cylinders are specified by diameter and height.

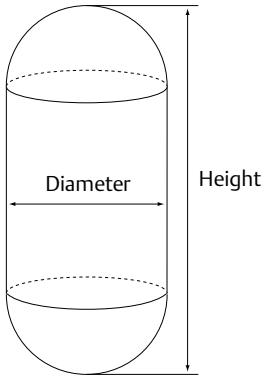

Vertical bullet

Vertical bullet tanks are specified by diameter and height. The volume calculation model for this tank type assumes that the radius of the bullet end is equal to the diameter/2.

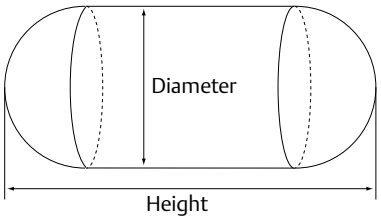

Horizontal bullet

Horizontal bullets are specified by diameter and height. The volume calculation model for this tank type assumes that the radius of the bullet end is equal to the diameter/2.

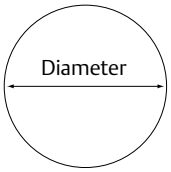

Sphere

Spherical tanks are specified by diameter.

4.3 Configuration using a Field Communicator

This section describes how to configure the Rosemount 3300 Series Transmitter by using a Field Communicator. A HART® communicator may also be used.

For information on all the capabilities, refer to the 375 Field Communicator User's Manual or the 475 Field Communicator User's Manual, available at www.fieldcommunicator.com.

Figure 4-5. 475 Field Communicator



A Enter key
B Tab keys
C Alphanumeric keys
D Backlight adjustment key
E Navigation keys
F Function key

Figure 4-6. HART Communicator Menu Tree Corresponding to Device Revision 2

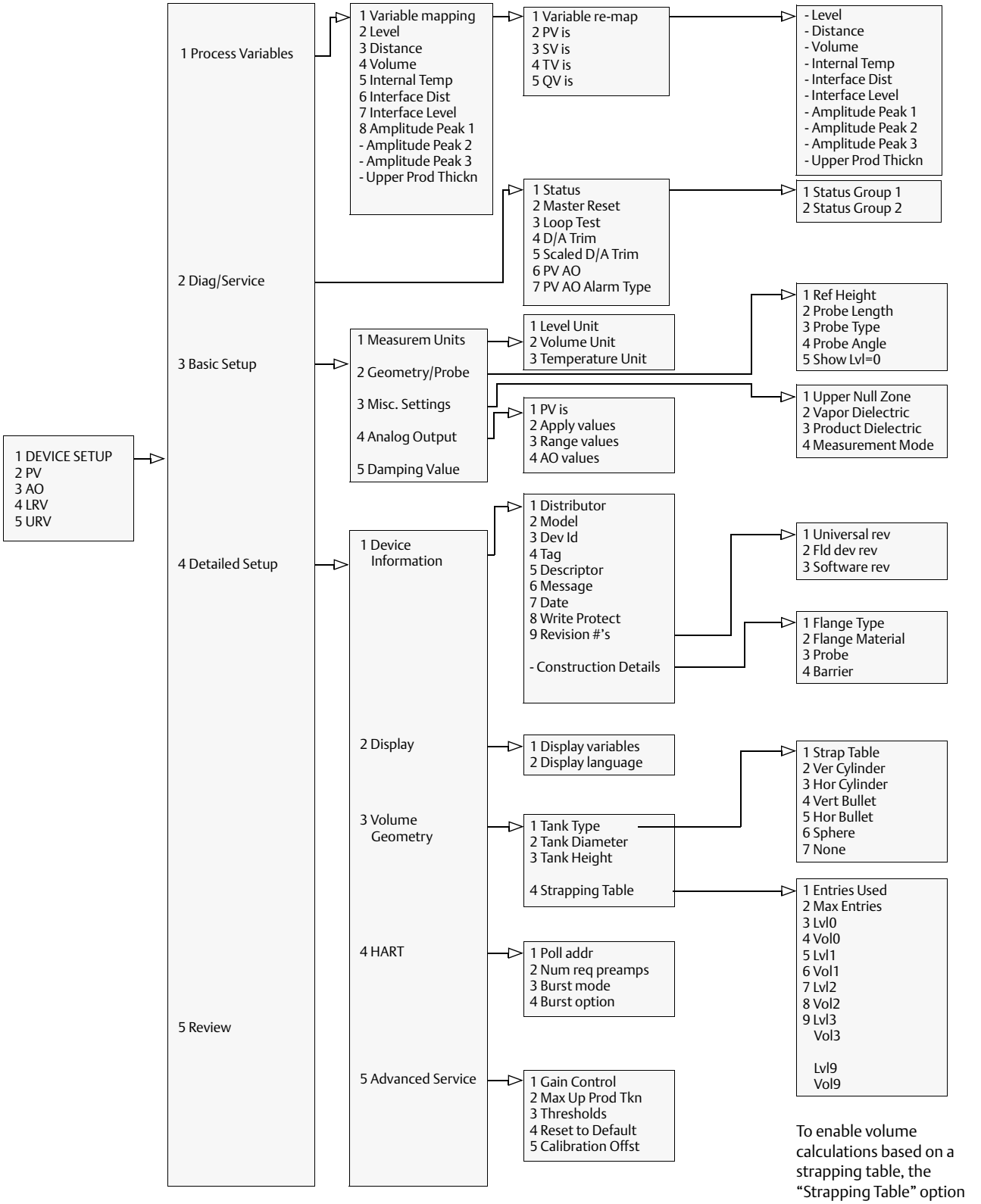

To enable volume calculations based on a strapping table, the "Strapping Table" option must be selected for tank type.

4.4 Basic configuration

This section describes the various HART commands used to configure the Rosemount 3300 Series Transmitters for level measurements. The transmitter outputs a 4-20 mA signal proportional to the primary variable. Three additional variables are available through the HART signal.

Table 4-1. Device Revision 2, HART Communicator Fast Key Sequence

Function	Fast Key Sequence
Transmitter variables(1)	1, 1, 1, 1
Measurement units	1, 3, 1
Reference gauge height	1, 3, 2, 1
Probe length	1, 3, 2, 2
Probe type	1, 3, 2, 3
Product dielectric	1, 3, 3, 3
Vapor dielectric	1, 3, 3, 2
Measurement mode	1, 3, 3, 4
Probe angle	1, 3, 2, 4
Maximum upper product thickness	1, 4, 5, 2
Damping	1, 3, 5
Display panel	1, 4, 2
4 and 20 mA points	1, 3, 4, 3
Volume units	1, 3, 1, 2
Tank type	1, 4, 3, 1
Tank dimensions	1, 4, 3, 2-3
Strapping table	1, 4, 3, 4

(1) For volume measurement, select the Volume option.

4.4.1 Transmitter variables

HART Comm	1, 1, 1, 1

You can assign up to four transmitter variables. Typically, the Primary Variable (PV) is configured to be Aggregate Level, Interface Level, or Volume.

For Rosemount 3301, the PV is typically set to be Level. If the transmitter is in the Immerse Probe mode (see Measurement mode on page 71), the PV is normally set to Interface Level.

For Rosemount 3302, the PV is typically set to Interface Level, but Level and other options can also be used.

4.4.2 Measurement units

HART Comm	1, 3, 1

Set transmitter units for level and temperature.

4.4.3 Reference gauge height

HART Comm	1, 3, 2, 1

The Reference Gauge Height is the distance from the Upper Reference Point to the bottom of the tank (see Figure 4-1 on page 62). When setting the Reference Gauge Height, keep in mind that this value is used for all level measurements performed by the Rosemount 3300 Series Transmitter.

The Reference Gauge Height must be set in linear (level) units, such as feet or meters, regardless of primary variable assignment.

4.4.4 Probe length

HART Comm	1, 3, 2, 2

The probe length is the distance from the Upper Reference Point to the end of the probe, see Figure 4-1 on page 62. If the probe is anchored to a weight, do not include the height of the weight. This parameter is pre-configured at factory. The probe length needs to be changed if, for example, the probe is shortened.

4.4.5 Probe type

HART Comm	1, 3, 2, 3

The transmitter automatically makes an initial calibration based on the type of probe that is used. This parameter is pre-configured at factory and only needs to be set if the probe is changed to another type. Select one of the following options:

- Rigid Twin
- Flexible Twin
- Coaxial
- Rigid Single 0.3 in. (8 mm)
- Flexible Single
- Coaxial HTHP
- Coaxial HP/C
- Rigid Single HTHP 0.3 in. (8 mm)
- Flexible Single HTHP
- Rigid Single PTFE
- Flexible Single PTFE
- Rigid Single HP/C 0.3 in. (8 mm)
- Flexible Single HP/C 0.3 in. (8 mm)

- Flexible Single HP
- Rigid Single 0.5 in. (13 mm)
- User Defined

Note
Flexible and rigid probes require different radar electronics and cannot be used with the same transmitter head.

4.4.6 Product dielectric

HART Comm	1, 3, 3, 3

For interface measurements, the dielectric constant of the upper product is essential for calculating the interface level and the upper product thickness. By default, the Product Dielectric parameter is about 2.

If the dielectric constant of the lower product is significantly smaller than the dielectric constant of water, you may need to make special adjustments. See Interface measurements for semi-transparent bottom products on page 96 for further information.The dielectric constant of the product is used for setting the appropriate signal amplitude thresholds, see section Service and Troubleshooting for more information on amplitude threshold settings. Normally, this parameter does not need to be changed for level measurements. However, for some products, measurement performance can be optimized by setting the proper product dielectric constant.

The Rosemount Configuration Tool (RCT) software includes a Dielectric Chart which lists the dielectric constants of a wide range of products. RCT also includes a tool which allows you to calculate dielectric constants based on measurements of the Upper Product Thickness.

4.4.7 Vapor dielectric

HART Comm	1, 3, 3, 2

In some applications, there is heavy vapor above the product surface having a significant influence on the level measurement. In such cases, the vapor dielectric can be entered to compensate for this effect.

The default value is equal to 1, which corresponds to the dielectric constant of vacuum. Normally, this value does not need to be changed since the effect on measurement performance is very small for most vapors.

4.4.8 Measurement mode

HART Comm	1, 3, 3, 4

Normally, the measurement mode does not need to be changed. The transmitter is pre-configured according to the specified model:

Table 4-2. Measurement Mode

Model	Measurement mode
3301	Level(1), Interface Immersed probe
3302	Level, Level and Interface(1), Interface Immersed probe

(1) Default setting.

Interface Immersed Probe is used for applications where the probe is fully immersed in liquid. In this mode, the transmitter ignores the upper product level. See Interface measurements with fully immersed probes on page 99 for more information.

Note
Only use *Interface Immersed Probe* for applications where interface is measured for a fully immersed probe.

4.4.9 Probe angle

HART Comm	1, 3, 2, 4

Enter the angle between the probe and the vertical line. The default value is equal to zero. Do not change this value if the transmitter is mounted with the probe along the vertical line (which is normally the case).

4.4.10 Maximum upper product thickness

HART Comm	1, 4, 5, 2

For interface measurements, the Maximum Upper Product Thickness parameter can be used in special cases when the dielectric constant of the upper product is relatively high. By setting this parameter, you can avoid that interface measurements get out of range.

4.4.11 Damping

HART Comm	1, 3, 5

The default damping value is 10. Normally, this value does not need to be changed. The Damping parameter determines how quickly the transmitter responds to level changes and how robust the measurement signal is against noise. See High level rates on page 98 for more information.

4.4.12 Display panel

HART Comm	1, 4, 2

Select which variables to be displayed and the desired language to be used. The display toggles between the selected variables every two seconds.

4.4.13 4 and 20 mA points

HART Comm	1, 3, 4, 3

When setting the range values, it is possible to enter the values directly using the keypad on the Field Communicator, or you may use actual values (HART command [1, 3, 4, 2]). Keep in mind that the 20 mA value must be below the upper transition zone. If the 20 mA point is set to a point within the Transition Zone, the full range of the analog output is not used.

Make sure the 20 mA value is below the Upper Null Zone (UNZ). (This parameter can be used if there are measurement problems in the upper part of the tank, see Disturbances at the top of the tank on page 102). The UNZ is equal to zero in the default configuration.

The 4 mA point must be above the lower transition zone. If the 4 mA point is set to a point within the transition zone or below the probe end (tank bottom for example), the full range of the analog output is not used.

See Transition zones on page 16 for more information on the size of upper and lower transition zones.

Figure 4-7. Range Values

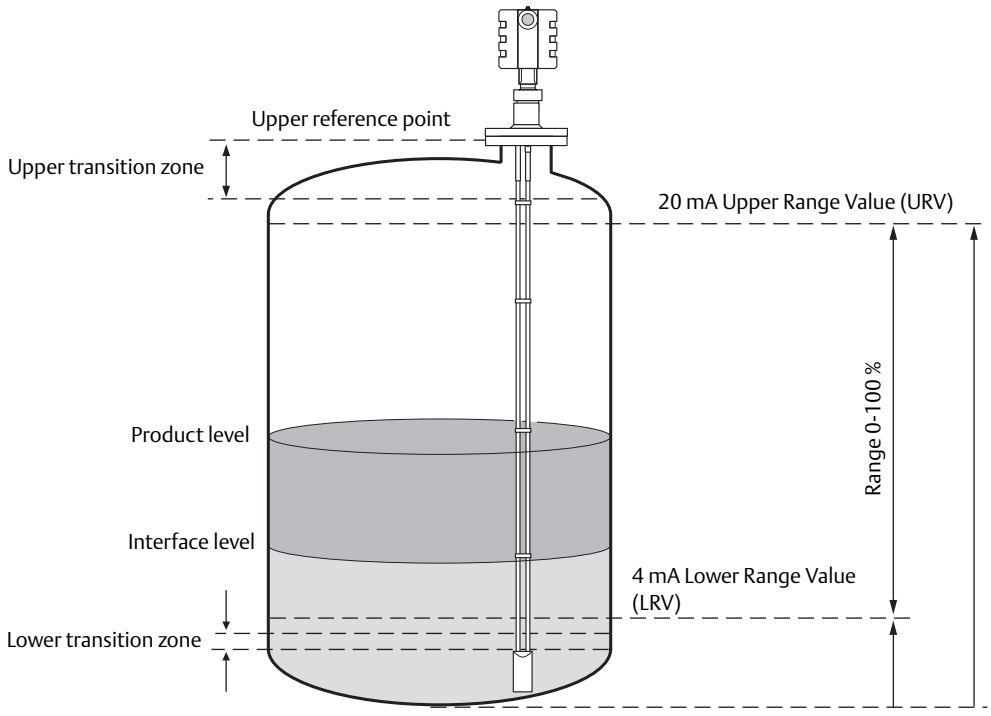

4.5 Volume configuration

4.5.1 Transmitter variables

HART Comm	1, 1, 1, 1

Select the Volume option to configure the transmitter for volume measurements.

4.5.2 Volume units

HART Comm	1, 3, 1, 2

Select one of the following units:

- Gallons
- Liters
- Imperial Gallons
- Cubic Meters
- Barrels
- Cubic Yards
- Cubic Feet
- Cubic Inch

4.5.3 Tank type

HART Comm	1, 4, 3, 1

Select a standard tank shape, or select the strapping option. Standard shapes are: Vertical Cylinder, Horizontal Cylinder, Vertical Bullet, Horizontal Bullet or Sphere. (If the PV is Level, select **None** for Tank Type).

If your tank does not correspond to any of the above tank shapes, select **Strap Table**.

4.5.4 Tank dimensions

HART Comm	1, 4, 3, 2-3

If a standard tank type was chosen, enter the diameter and height of the tank. See Volume configuration on page 64 for information on how to specify tank dimensions.

4.5.5 Strapping table

HART Comm	1, 4, 3, 4

If tank type **Strapping Table** was chosen, enter how many entries you will use, and the actual level and volume points. You can enter from 2 to 10 points. The strapping points must be entered such that the first point corresponds to the lowest level, and the last point corresponds to the topmost level of the tank.

4.6 Configuration using the Radar Configuration Tool

The Radar Configuration Tool (RCT) is a user-friendly software tool that allows you to configure the Rosemount 3300 Series Transmitter.

You can select either of the following two methods to configure a Rosemount 3300 Series Transmitter:

- Start the Wizard for a guided installation if you are unfamiliar with the Rosemount 3300 Series.
- Use the Setup function if you are already familiar with the configuration process or if you just want to change the current settings.

4.6.1 Installing the RCT software

To install the RCT:

1. Insert the installation CD into your CD-ROM drive.
2. If the installation program does not start automatically, use File Explorer, locate your CD/DVD ROM drive, and select Setup.exe.
3. Follow the instructions on the screen.
4. For optimum performance, set COM Port Buffers to 1. See To set the COM port buffers on page 89.

To start the RCT:

1. From the Start menu, select **Programs** > **RCT Tools** > **RCT**.
2. In the RCT Status Bar, check that RCT communicates with the transmitter:

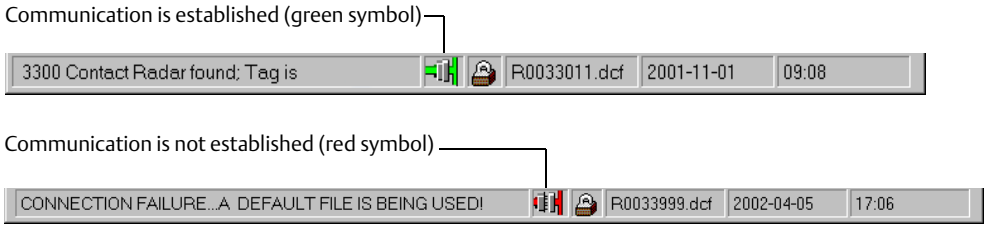

4.6.2 Specifying the COM port

If communication is not established, open the HART Communication Server window, and check that the right COM port is selected.

To check the current COM port settings, do the following:

1. Locate the HART Server icon in the lower right corner of the screen.

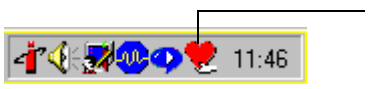

2. Double-click the HART Server icon.

Figure 4-8. Rosemouont Hart Communication Software - Server Window

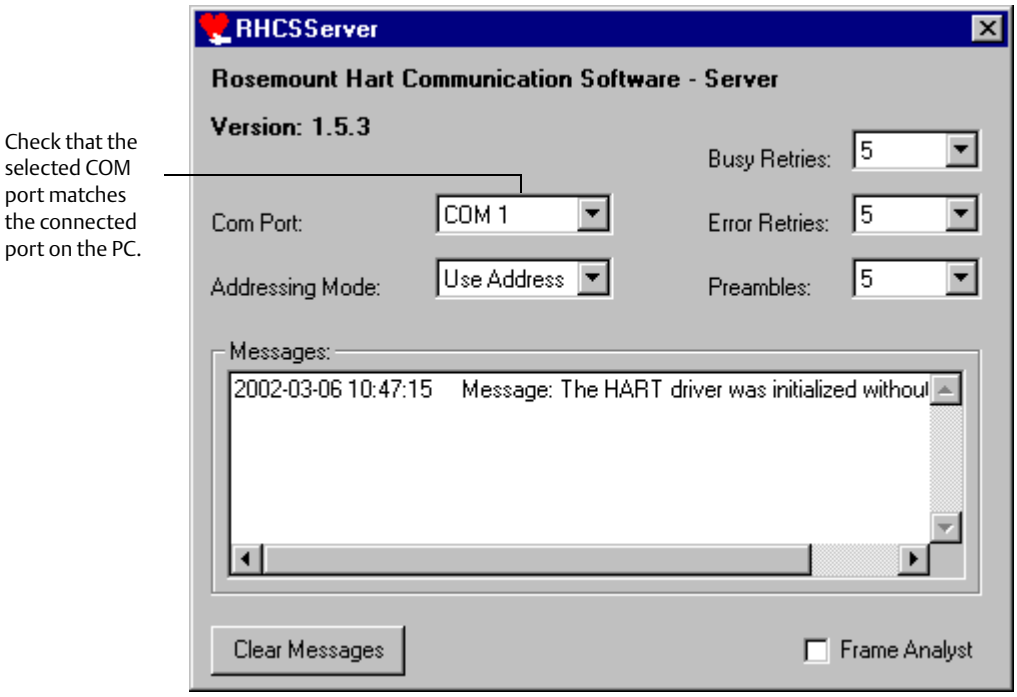

3. Check the COM port.
4. Select the COM Port option that matches the COM Port connected to the transmitter.
5. If communication is intermittent, increase *Busy Retries* and *Error Retries* to 5 and 5 respectively.
6. Select the **Search for a device** icon in the RCT tool bar:

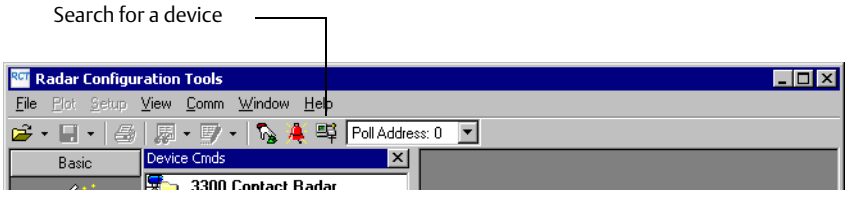

4.6.3 Help in RCT

Press F1 or select the **Contents** option from the Help menu to access help information. If the F1 key is pressed, a help text appears with information about the window that is currently open.

If a menu option is selected, a help text appears with information about that particular menu.

4.6.4 Using the Setup Wizard

To install a Rosemount 3300 Series Transmitter by using the installation Wizard, do the following:

1. Start the RCT software.

2. In the RCT workspace, select the **Wizard** icon (**View** > **Tools** > **Wizard**),
or
select the **View** > **Wizard** menu option.

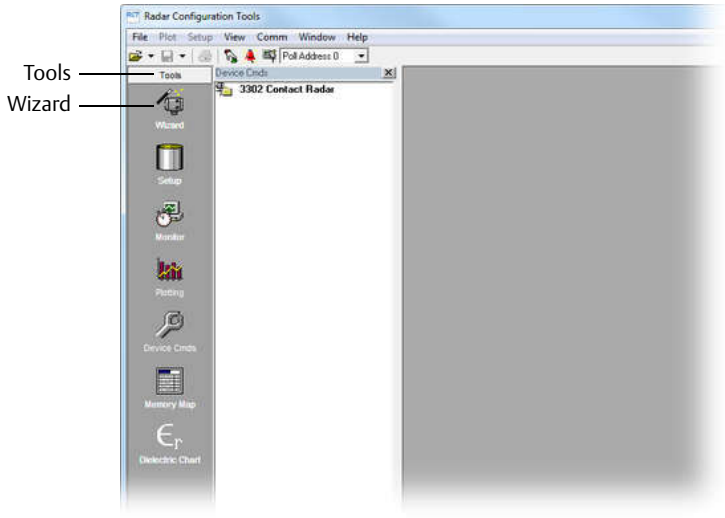

3. Select the **Start** button and follow the instructions. Now you will be guided through a number of dialogs allowing you to configure the transmitter.

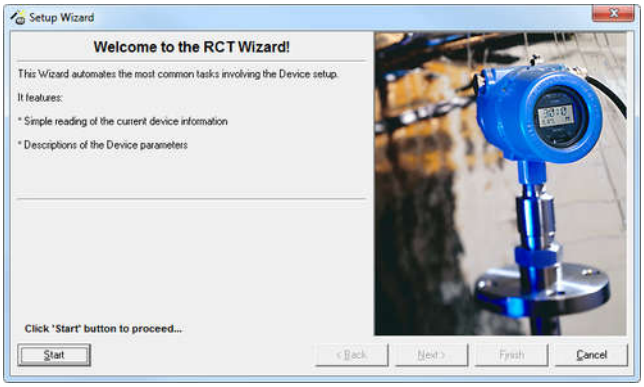

4.6.5 Using the Setup function

To install a Rosemount 3300 Series Transmitter by using the Setup function, do the following:

1. Start the RCT software.
2. In the RCT workspace select the **Setup** icon (make sure the **Tools** area is open),
   or
   select the **View** > **Setup** menu option.

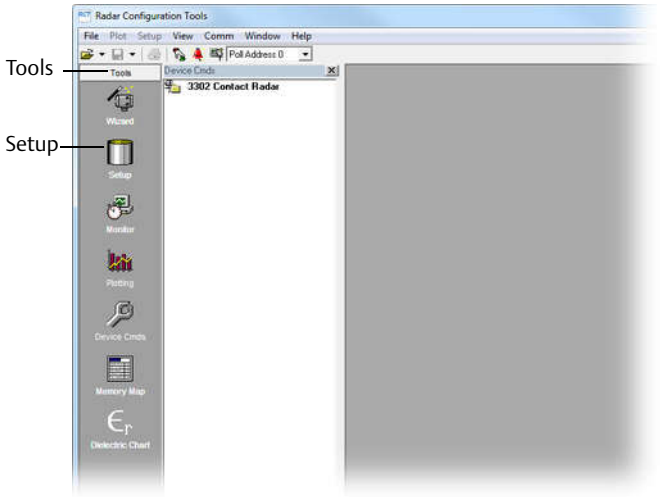

3. Select the appropriate tab:

- **Info:** information about the device.
- **Basics:** information about probe type and measurement units.
- **Output:** information about transmitter variables.
- **Probe:** information about probe type and length.
- **Geometry:** information on reference gauge height, probe length, mounting type, nozzle inner diameter, and nozzle height.
- **Environment:** information about measurement mode, the upper product dielectric constant and advanced environment options
- **Volume:** specification of tank geometry for volume calculations.
- **Display:** display panel settings.
- **Signal Quality Metrics:** information about signal quality and surface/noise margin

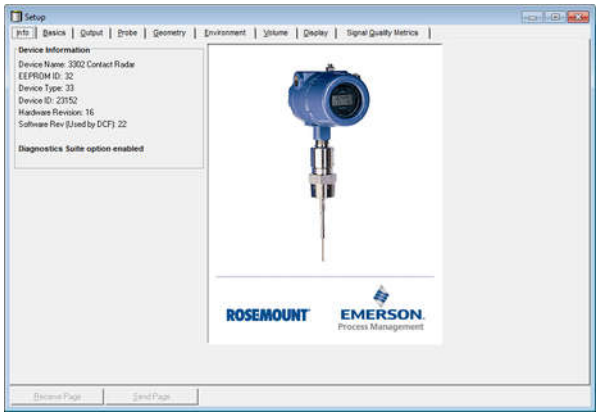

Note
When working with the Setup window, keep in mind that for all tabs, except for the Info tab, data is updated by selecting the **Receive** button. To download data to the transmitter, select the **Send** button.

4.6.6 Setup - Info

The **Info** tab shows information about the connected transmitter.

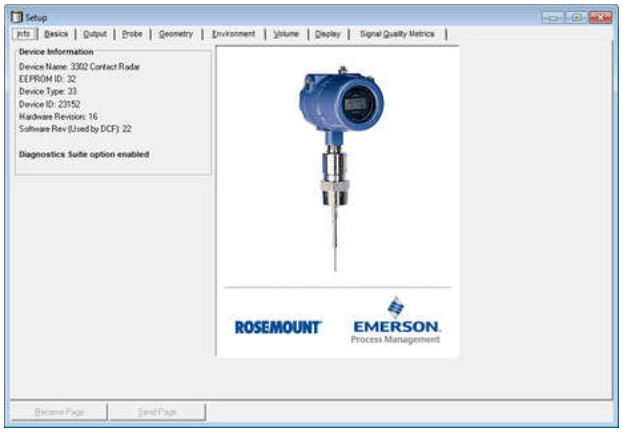

- **Device Name:** designation of the current transmitter model.
- **EPROM ID:** current transmitter database version.
- **Device Type:** designates the transmitter type. 33 is used for the Rosemount 3300 Series.
- **Device ID:** a unique identifier for each Rosemount 3300 Series Transmitter.
- **Hardware Rev:** the current revision of the transmitter electronic board.
- **Software Rev:** the current revision of the transmitter software that controls measurement, communication, internal checks etc.

4.6.7 Setup - Basics

The **Basics** tab allows you to select **Measurement Units** for Length, Volume, and Temperature. These units are used wherever measurement and configuration data is presented.

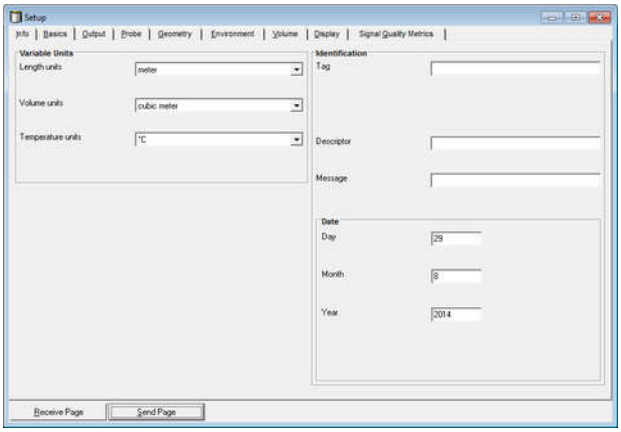

This window also allows you to enter some general information about the transmitter, such as Message, Tag, Descriptor, and Date. This information is not required for the operation of the transmitter and can be left out if desired.

4.6.8 Setup - Output

The Output tab lets you assign up to four transmitter variables.

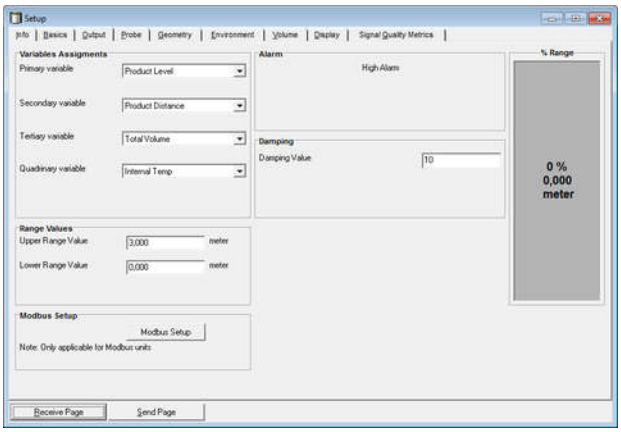

Typically, the PV is configured to be Product Level, Interface Level, or Volume.

Other variables like Product Distance, Interface Distance, Upper Product Thickness, etc. are available as well.

For Rosemount 3301, the PV is typically set to be Level. If the transmitter is in the Immersed Probe mode (see Measurement mode on page 71), the PV is normally set to Interface Level.

For Rosemount 3302, the PV is typically set to be Interface Level, but Level and other options can also be used.

Set the Lower Range Value (4 mA) and the Upper Range Value (20 mA) to the desired values. Keep in mind that the 20 mA value must be below the upper transition zone, and the 4 mA point must be above the lower transition zone if you want to use the full 4-20 mA range within the measuring range of the transmitter.

Make sure the 20 mA value is set below the Upper Null Zone (UNZ). (The UNZ parameter can be used if there are measurement problems in the upper part of the tank, see Disturbances at the top of the tank on page 102.) In the default configuration, the UNZ is equal to zero.

See Transition zones on page 16 for more information on upper and lower transition zones.

See Basic configuration on page 69 for more information on setting the Upper and Lower Range values.

The default Damping value is 10. Normally this value does not need to be changed. The Damping parameter may be changed if there are high filling rates, see High level rates on page 98 for more information.

4.6.9 Setup - Probe

The Probe tab contains information on probe type and length. The Rosemount 3300 Series Transmitter makes some initial calibrations automatically, based on the chosen **probe type**. The following probe types are available:

- Rigid twin
- Flexible twin
- Coaxial
- Rigid single 0.3 in. (8 mm)
- Flexible single
- Coaxial HTHP
- Coaxial HP/C
- Rigid single HTHP 0.3 in. (8 mm)
- Flexible single HTHP
- Rigid single PTFE
- Flexible single PTFE
- Rigid single HP/C 0.3 in. (8 mm)
- Flexible single HP/C 0.3 in. (8 mm)
- Flexible single HP
- Rigid single 0.5 in. (13 mm)
- User defined

Note
Flexible and rigid probes require different radar electronics and cannot be used with the same transmitter head.

The **probe length** is the distance from the upper reference point to the end of the probe, see Figure 4-1 on page 62. If the probe is anchored to a weight, do not include the height of the weight.

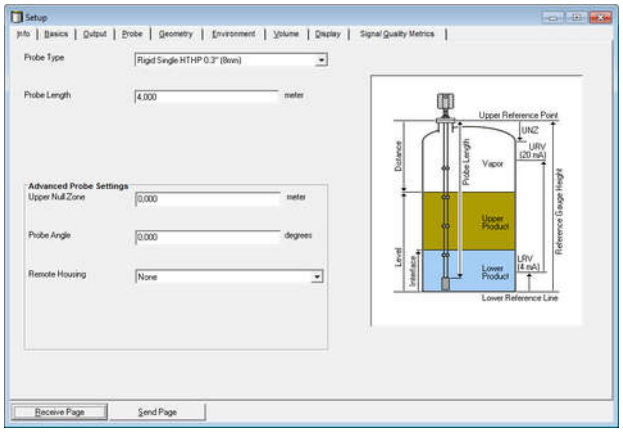

4.6.10 Setup - Geometry

The Geometry tab contains information on reference gauge height, probe length, mounting type, nozzle inner diameter, and nozzle height.

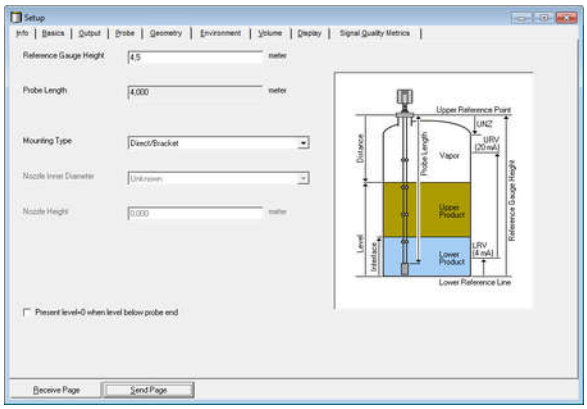

The **Reference Gauge Height** is the distance from the upper reference point to the bottom of the tank (see Figure 4-1 on page 62). When setting the reference gauge height, keep in mind that this value is used for all level and volume measurements performed by the Rosemount 3300 Series Transmitter.

The reference gauge height must be set in linear (level) units, such as feet or meters, regardless of primary variable assignment.

The **Upper Null Zone** (UNZ) should not be changed unless there are disturbances at the top of the tank. By increasing the UNZ value, measurements in this region can be avoided. See Disturbances at the top of the tank on page 102 for more information on how to use the UNZ. The UNZ is equal to zero in the factory configuration.

Setup - Environment

The **Environment** tab contains information about measurement mode, the upper product dielectric constant and advanced environment options.

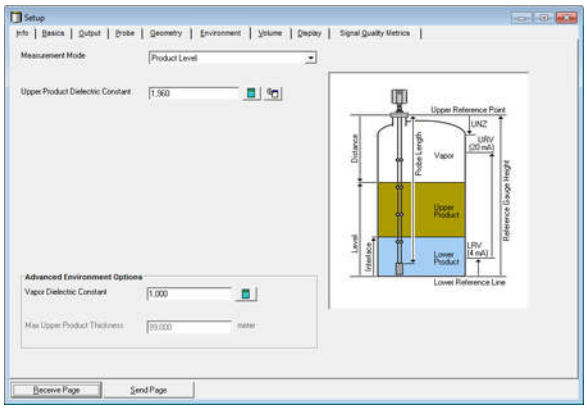

Normally the measurement mode does not need to be changed. The transmitter is pre-configured according to the specified model:

Table 4-3. Measurement Mode

Model	Measurement mode
3301	Level(1), interface immersed probe
3302	Level, level and interface(1), interface immersed probe

(1) Default setting.

Interface immersed probe is used for applications where the probe is fully immersed in liquid. In this mode the transmitter ignores the upper product level. See Interface measurements with fully immersed probes on page 99 for more information.

Note
Use interface immersed Probe only for applications where interface is measured for a fully immersed probe.

Dielectrics

In some applications there is heavy vapor above the product surface having a significant influence on the level measurement. In such cases, the vapor dielectric can be entered to compensate for this effect.

The default value is equal to 1, which corresponds to the dielectric constant of vacuum. Normally, this value does not need to be changed since the effect on measurement performance is very small for most vapors.

For interface measurements, the dielectric constant of the upper product is essential for calculating interface level and the upper product thickness. By default, the upper product dielectric parameter is about 2.

If the dielectric constant of the lower product is significantly smaller than the dielectric constant of water, you may need to make special adjustments. See section Service and Troubleshooting for further information.

The dielectric constant of the product is used for setting the appropriate signal amplitude thresholds, see section Service and Troubleshooting for more information on amplitude threshold settings. Normally, this parameter does not need to be changed for level measurements. However, for some products, measurement performance can be optimized by setting the proper product dielectric constant.

RCT contains tools to estimate the dielectric constant of the current product:

- The dielectric chart lists the dielectric constant of a large number of products. Use one of the following methods to view the dielectric chart:
  - Select the **View** > **Dielectric** > **Dielectric Chart** menu option.
  - Select the **Dielectric Chart** icon in the project bar **Advanced** section.
- The dielectric calculator allows you to calculate the dielectric constant of the upper product based on the following input:
  - actual upper product thickness,
  - the dielectric constant value stored in the transmitter, and
  - the upper product thickness presented by the transmitter.

Measurements below probe end

The *Present Level=0...* check-box controls how the level value is presented when the tank is almost empty. By selecting this check- box, the Level is set equal to zero as long as the product surface is below the probe.

If the check-box is not selected, the level value is equal to the difference between reference gauge height R and probe length L when the product surface is below the probe (see Basic configuration on page 62 for information on tank geometry).

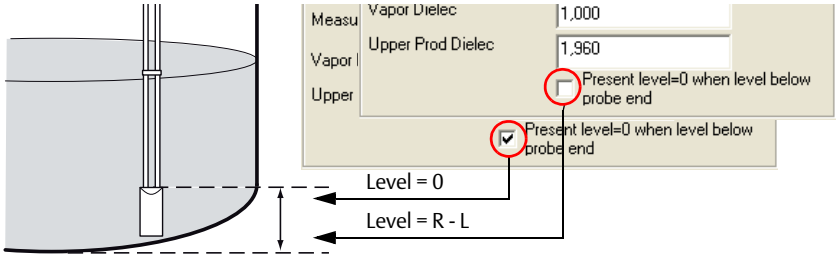

4.6.11 Setup - Volume

The **Volume** tab allows you to configure the transmitter for volume calculations.

Figure 4-9. Setup Volume Tab

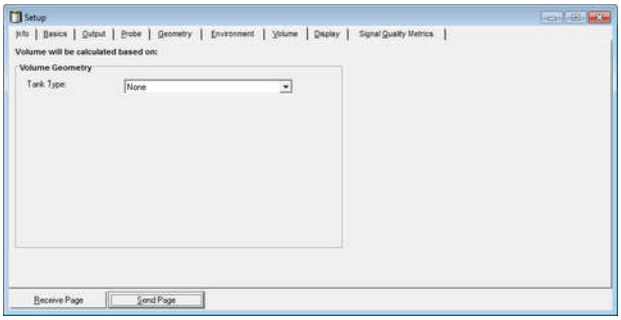

You can select one of the standard tank shapes or the strapping option. Select **None** if volume calculation is not used at all.

Select one of the following options:

- Vertical cylinder
- Horizontal cylinder
- Vertical bullet
- Horizontal bullet
- Sphere
- Strap table
- None

For further information, see Volume configuration on page 64.

4.6.12 Setup - Display

The **Display** tab allows you to specify which parameters to appear on the display panel. The display has two rows, the upper row with five characters is for the measured value, and the lower row with six characters is for the value name. The display toggles between the different variables every 2 seconds.

Figure 4-10. Setup Display Tab

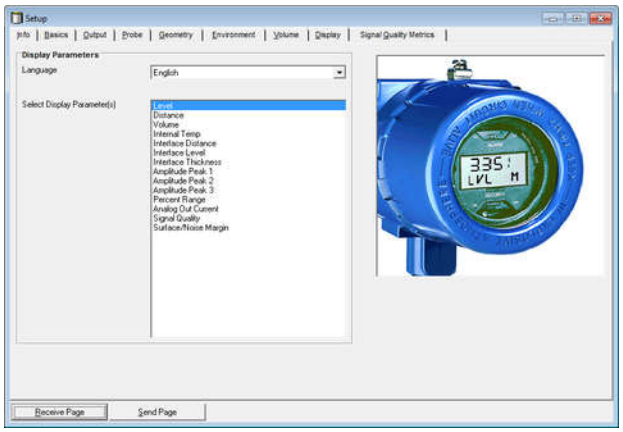

Select one of the following options:

Table 4-4. Display Parameters

Parameter	Description
Level	Product level
Distance	Distance from the upper reference point to the product surface
Volume	Total product volume
Internal Temp	Temperature inside the transmitter housing
Interface Distance	Distance between the upper reference point and the interface between the upper and lower product
Interface Level	Level of the lower product
Interface Thickness	Thickness of the upper product
Amplitude Peak 1	Signal amplitude of the reflected signal from the reference pulse
Amplitude Peak 2	Signal amplitude of the reflected signal from the product surface
Amplitude Peak 3	Signal amplitude of the reflected signal from the surface of the bottom product (interface measurements)
Percent Range	Level value in percent of total measurement range
Analog Out Current	4 -20 mA current
Signal Quality	Information on signal quality
Surface/Noise Margin	Information on surface/noise margin

4.6.13 Setup - Signal Quality Metrics

The **Signal Quality Metrics** tab contains information about signal quality and surface/noise margin.

Figure 4-11. Setup Signal Quality Metrics Tab

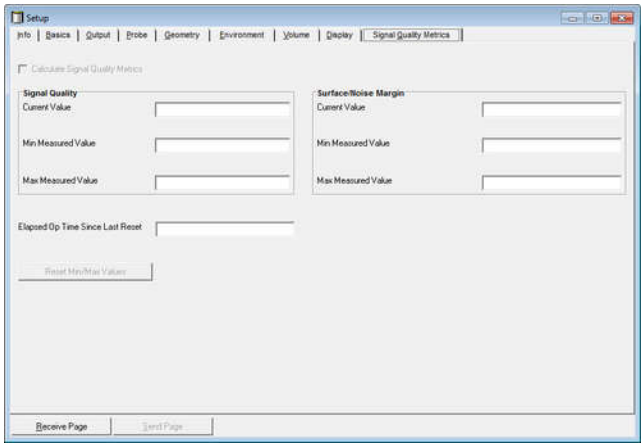

4.7 Special functions

4.7.1 Tri-Loop™

The Rosemount 333 HART Tri-Loop HART-to-Analog Signal Converter is capable of converting a digital HART burst signal into three additional 4-20 mA analog signals.

To set the Rosemount 3300 Series Transmitter up for the HART Tri-Loop, do the following:

1. Make sure the Rosemount 3300 Series Transmitter is properly configured.
2. If RCT is used for the Rosemount 3300 Series setup, it is recommended that the receive buffer and transfer buffer for the selected COM port are adjusted as described below in section To set the COM port buffers on page 89. Otherwise, Burst Mode cannot be turned off by RCT (for further information on other options for turning off the Burst Mode see To turn off the Burst Mode on page 89).
3. Assign transmitter variables primary variable, secondary variable etc.
   HART command [1,1,1,1].
   RCT: Setup > Output tab.

Variables Assignment

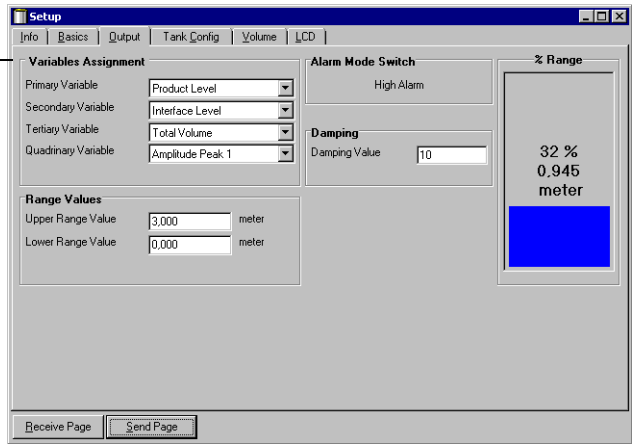

4. Configure variable units: length, volume, and temperature.
   HART command [1,3,2,1-3].
   RCT: Setup > Basics tab.

Variable Units

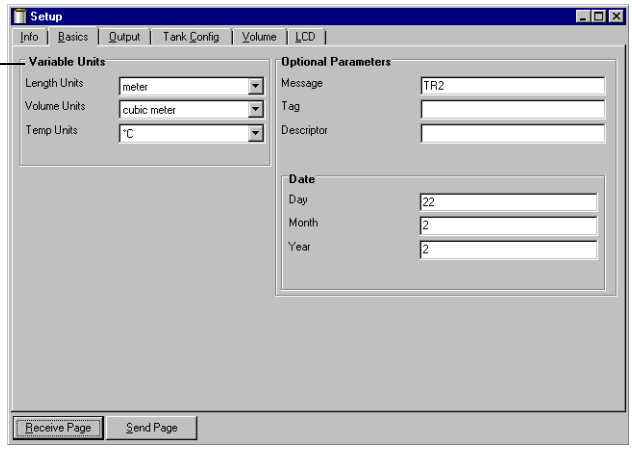

5. Set the Rosemount 3300 Series in Burst Mode.
   HART command [1, 4, 5, 2, 3].
   RCT: Device Commands > Details > Set Burst Mode option.

6. Select Burst option 3 = Process variables and current (Process vars/crnt).
   HART command [1,4,5,2,4].

7. Install the Tri-Loop. Connect Channel 1 wires, and optionally wires for Channel 2 and Channel 3.

8. Configure Tri-Loop Channel 1:

   a. Assign variable: Tri-Loop HART command [1,2,2,1,1].
      Make sure the SV, TV, and QV match the configuration of the Rosemount 3300 Series Transmitter.
   b. Assign units: Tri-Loop HART command [1,2,2,1,2]. Make sure the same units are used as for the Rosemount 3300 Series Transmitter.
   c. Set the Upper Range Value and the Lower Range Value: Tri-Loop HART command [1,2,2,1,3-4].
   d. Enable the channel. Tri-Loop HART command [1,2,2,1,5].

9. (Optional) Repeat steps a-d for Channels 2 and 3.

10. Connect wires to Tri-Loop Burst Input.

11. Enter the desired tag, descriptor, and message information:
    Tri-Loop HART command [1,2,3].

12. (Optional) If necessary, perform an analog output trim for Channel 1 (and Channel 2 and 3 if they are used).
    Tri-Loop HART command [1,1,4].

Figure 4-12. Tri-Loop Wiring

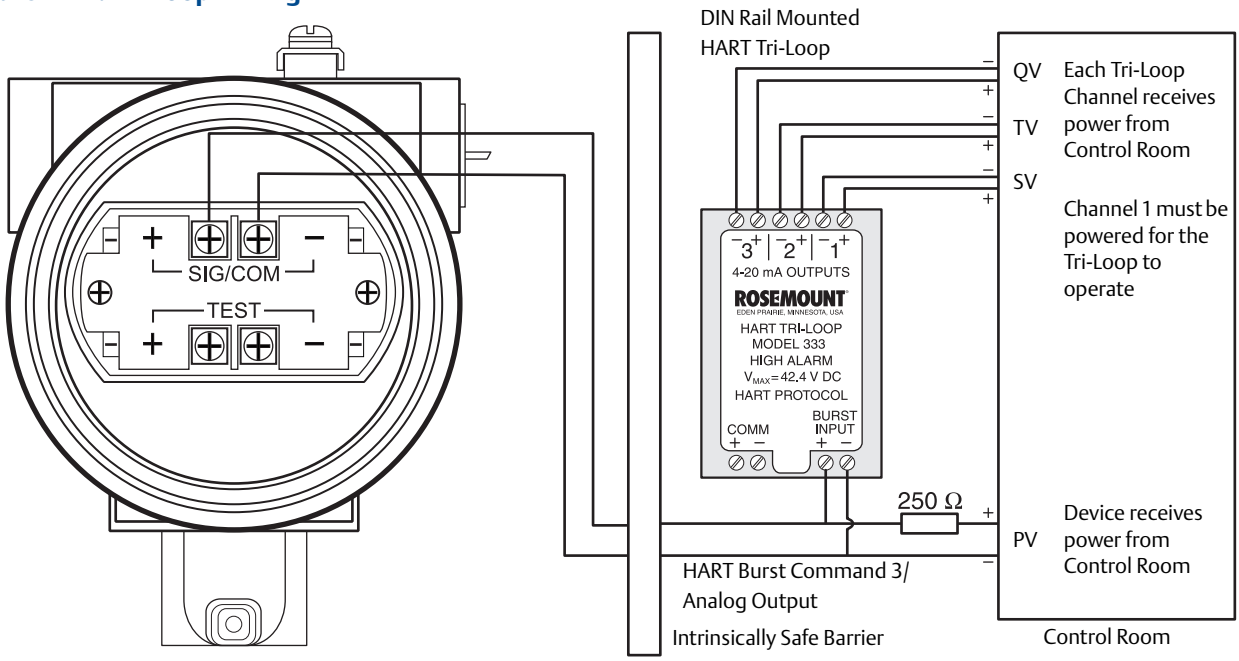

See the Model 333 HART® Tri-Loop HART-to-Analog Signal Converter Reference Manual (Document No. 00809-0100-4754) for further information on how to install and configure the Tri-Loop.

To turn off the Burst Mode

To turn off the Burst Mode, use one of the following options:

- The RCT program (requires that the receive and transfer buffers for the selected COM port are adjusted)
- The Rosemount Burst Mode Switch software
- A Field Communicator
- The AMS® Device Manager software

To set the COM port buffers

To be able to communicate with the Rosemount 3300 Series in Burst Mode, the receive and transfer buffers need to be adjusted as written below.

If you have Windows XP

1. In the *MS Windows™ Control Panel* open the **System** option.
2. Choose the **Hardware** tab and select the **Device Manager** button.
3. Expand the **Ports** node in the tree view.
4. Click the right mouse button on the selected COM port and choose **Properties**.
5. Select the **Port Settings** tab and click the **Advanced** button.
6. Drag the *Receive Buffer* and *Transfer Buffer* slides to 1.
7. Select the **OK** button.
8. Reboot the computer.

If you have Windows 7, Windows 8, or Windows 8.1

1. In the **Start** menu, select **Control Panel** > **System and Security** > **System** > **Device Manager**.
2. Double-click **Ports (COM & LPT)**.
3. Right-click on the selected COM port and select **Properties**.
4. Select the **Port Settings** tab and then select the **Advanced** button.
5. Drag the *Receive Buffer* and *Transmit Buffer* to 1.
6. Click **OK**.
7. Restart the computer.

Section 5 Operation

Display functionality 91
Error messages 92

5.1 Display functionality

The Rosemount 3300 Series Transmitter uses the display for presentation of measurement variables. The display has two rows, the upper row with five characters is for the measured value, and the lower row with six characters is for the value name and measurement unit. The display toggles between the different variables every two seconds. Variables to be presented are configurable by using a Field Communicator or by using the Radar Configuration Tools software.

Figure 5-1. Presentation of Measurement Data

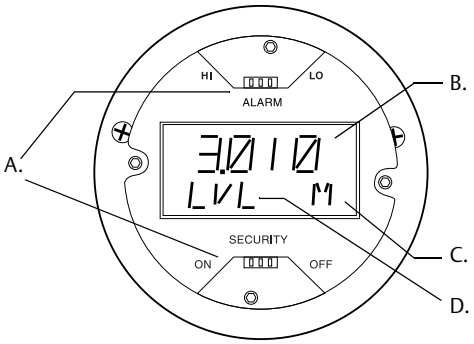

A. Jumpers for alarm and write protection settings
B. Measurement value
C. Measurement unit
D. Measurement variable

The Rosemount 3300 Series can display the following variables:

- Level
- Distance
- Volume
- Internal temperature
- Interface distance
- Interface level
- Amplitude 1, 2, and 3 (see Service and Troubleshooting for more information)
- Interface thickness
- Percent of range
- Analog current out

5.2 Error messages

The display can also be used for presentation of software errors. The upper row shows error codes and the lower row shows 'ERROR'.

Figure 5-2. Presentation of Error Messages

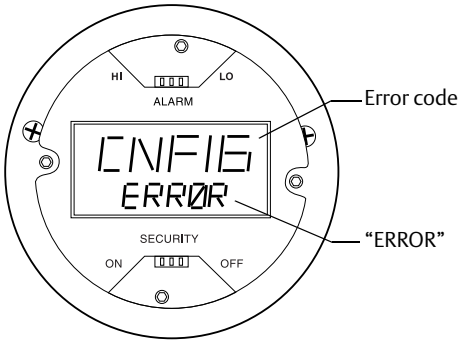

The following errors can be displayed:

Code	Error
CNFIG	Invalid configuration
00001	RAM failure
00002	ROM checksum
00006	Waveform acquisition failure
00007	EEprom factory checksum
00008	EEprom user checksum
00010	Software error
00013	Probe failure

See also “Errors” on page 113.

5.3 Alarm and write protection

When mounting the integral display panel, it is important that the alarm and write protection switches on the transmitter mother board are correctly set. Make sure the alarm switch is in the HIGH position and the write protection switch is in the OFF position, see Figure 5-3. See also “Before you install” on page 20 for more information.

Figure 5-3. Alarm and Write Protection Switches

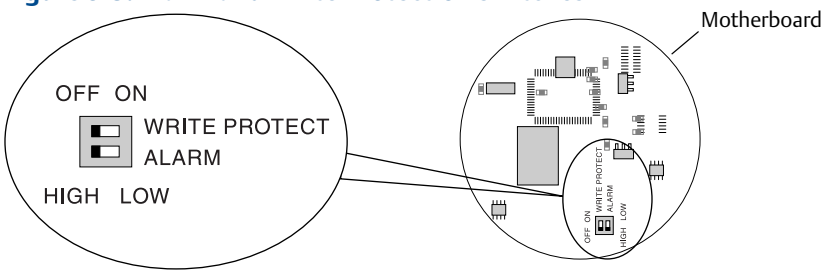

Once the mother board positions are set, the display positions become the master.

Section 6 Service and Troubleshooting

Safety messages 93
Advanced configuration 94
Service 100
Diagnostic messages 112

6.1 Safety messages

Procedures and instructions in this section may require special precautions to ensure the safety of the personnel performing the operations. Information that raises potential safety issues is indicated by a warning symbol (⚠). Please refer to the following safety messages before performing an operation preceded by this symbol.

⚠ WARNING

Explosions could result in death or serious injury.

- Verify that the operating environment of the gauge is consistent with the appropriate hazardous locations certifications.
- Before connecting a HART®-based communicator in an explosive atmosphere, make sure the instruments in the loop are installed in accordance with intrinsically safe or non-incendive field wiring practices.
- In an Explosion-proof/Flameproof installation, do not remove the transmitter cover when power is applied to the unit.
- Eliminate the risk of ESD discharge prior to dismounting the transmitter head.
- Probes may generate an ignition-capable level of electrostatic charge under extreme conditions. During any type of installation or maintenance in a potentially explosive atmosphere, the responsible person should make sure that any ESD risks are eliminated before attempting to separate the probe from the transmitter head.

Failure to follow safe installation and servicing guidelines could result in death or serious injury.

- Make sure only qualified personnel perform the installation.
- Use the equipment only as specified in this manual. Failure to do so may impair the protection provided by the equipment.
- Do not perform any service other than those contained in this manual unless you are qualified.

High voltage that may be present on leads could cause electrical shock.

- Avoid contact with leads and terminals.
- Make sure the main power to the Rosemount 3300 Series Transmitter is off, and the lines to any other external power source are disconnected or not powered while wiring the gauge.
- Probes covered with plastic and/or with plastic discs may generate an ignition-capable level of electrostatic charge under certain extreme conditions. Therefore, when the probe is used in a potentially explosive atmosphere, appropriate measures must be taken to prevent electrostatic discharge.

Process leaks could result in death or serious injury.

- Make sure that the transmitter is handled carefully. If the Process Seal is damaged, gas might escape from the tank if the transmitter head is removed from the probe.

6.2 Advanced configuration

This section covers non-standard configuration.

6.2.1 User defined upper reference point

If you want to specify your own upper reference point, you can do this by setting the *Calibration Offset* parameter.

Figure 6-1. Tank Geometry

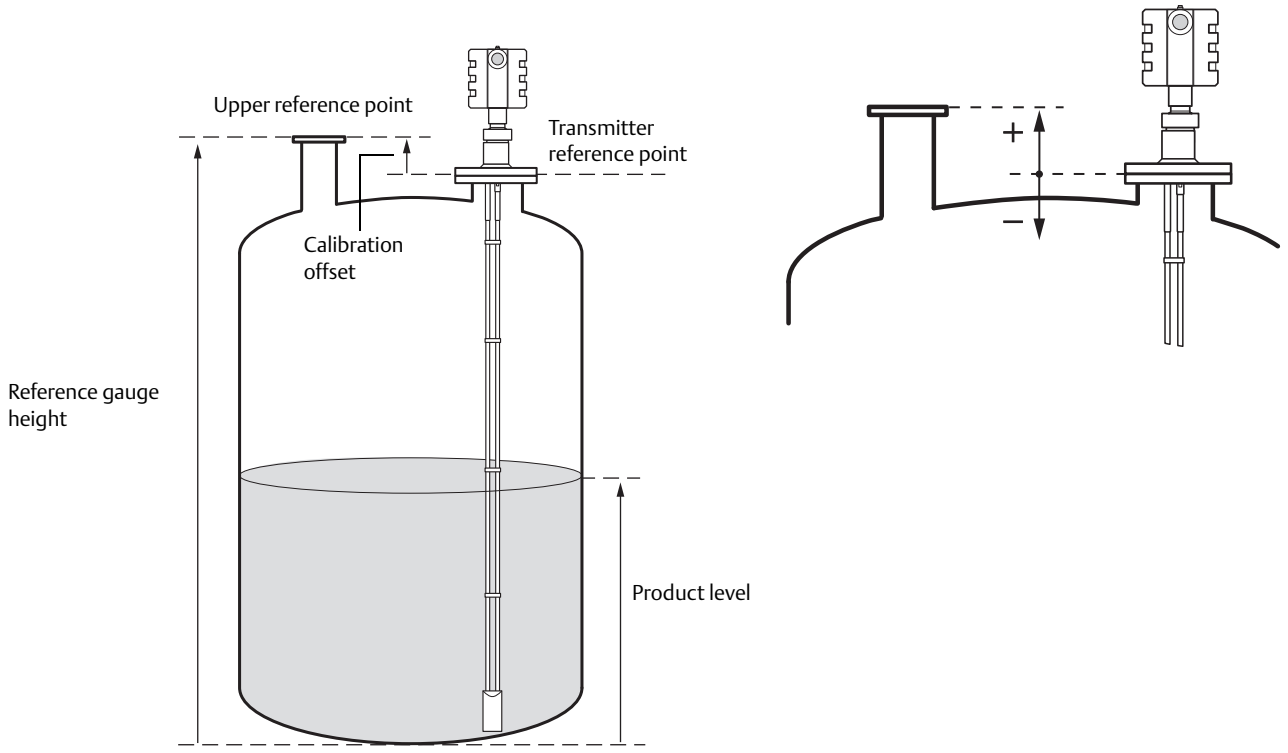

To set the desired upper reference point, do the following:

1. Adjust the reference gauge height to the distance from the tank bottom to the desired upper reference point.

2. Add the distance between the upper reference point and the transmitter reference point to the calibration offset value that is stored in the transmitter database.
   With the HART Communicator, Calibration Offset is available as HART Fast Key sequence [1, 4, 5, 5].
   In Radar Configuration Tool (RCT), Calibration Offset is available under the **Tools** section in the RCT Project Bar:
   Device Commands > **Basics** > **Set Calibration Offset**.

6.2.2 Plotting the measurement signal

The Radar Configuration Tool (RCT) has powerful tools for advanced troubleshooting. By using the Waveform Plot function, you get an instant view of the tank signal. Measurement problems can be solved by studying the position and amplitude of the different pulses.

To plot the measurement signal:

1. Start the RCT program.
2. Select the **View** > **Plotting** menu option, or select the Plotting icon in the RCT workspace (**Tools** page at the left side of the workspace) and select the Read button.

Figure 6-2. Waveform Plot in RCT

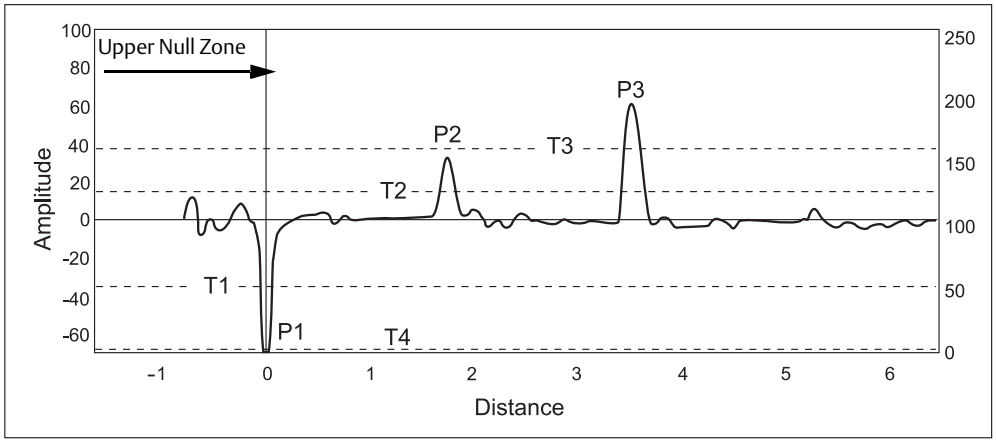

In a typical measurement situation the following pulses appear in the diagram:

P1 - Reference pulse. This pulse is caused by the transition between transmitter head and probe. It is used by the transmitter as a reference at level measurements.

P2 - Product surface. This pulse is caused by a reflection on the product surface. In Measurement Mode = Interface when Immersed Probe however, P2 indicates the interface since the surface of the upper product is ignored.

P3 - Interface or probe end. This pulse is caused by reflection on the interface between an upper product and a bottom product with a relatively high dielectric constant. It may also be caused by the probe end if there is no product above. This pulse is shown when the transmitter is in Measurement Mode = Level & Interface.

Different amplitude thresholds are used in order to filter out unwanted signals. The following amplitude thresholds are used for the Rosemount 3300 Series Transmitter:

T1 - amplitude threshold for detection of the reference pulse P1.

T2 - amplitude threshold for detection of the product level peak P2.

T3 - amplitude threshold for detection of the interface level peak P3.

T4 - amplitude threshold that is used to detect whether the probe is fully immersed in the upper product or not.

Normally, the thresholds are adjusted to approximately 50% of the signal peak amplitude. To adjust the **Amplitude Thresholds,** open the **Tools** section in the RCT Project Bar and select **Device Commands** > **Details** > **Set Nominal Thresholds**. To reset the default values, set Amplitude Threshold = 0 (zero).

Logging and saving to disk

The waveform plot can be automatically logged and saved to file by specifying the read plot interval and the number of plots to log.

Figure 6-3. Disk Logging Waveform Plot

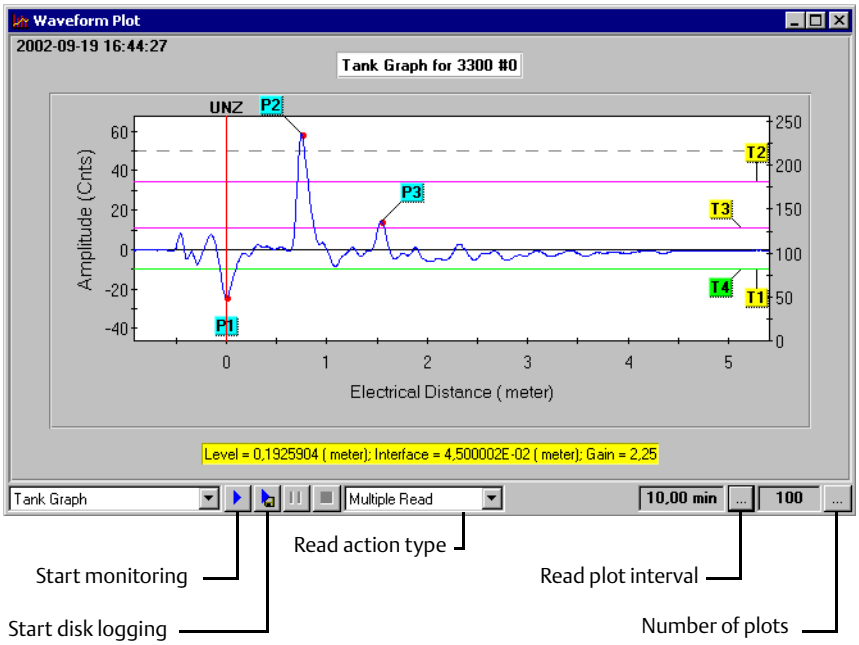

The **Read Plot Interval** entry field specifies the time interval between plots that are saved to disk. For example, type 10 if you want the waveform plot to be updated every ten minutes.

Number of plots to log specifies the maximum number of plot files that will be stored. The default value is 100.

Select the **Start Disk Logging** button to start the log. Make sure that Read Action type is set to Multiple Read. Otherwise, RCT will only save one log file. Select a destination folder and enter a file name. For each new file, the corresponding number is appended to the end of the file name.

6.2.3 Interface measurements for semi-transparent bottom products

In interface applications where the bottom product has a low dielectric constant, or if the signal is attenuated in the upper product, the amplitude of the reflected signal is relatively low and difficult for the transmitter to detect. In such a case it may be possible to detect the reflected signal if the corresponding amplitude threshold is adjusted.

The RCT allows you to view a waveform plot to analyze the measurement signal. The plot shows the signal and the thresholds used for the different amplitude peaks. By adjusting amplitude threshold T3, it is possible to detect even weak interface signals.

Guidelines for amplitude threshold settings:

- The amplitude threshold T3 should be approximately 50 % of the interface signal amplitude.
- Threshold T3 should not be less than 3.
- If possible, T3 should be higher than T2.

You can use the RCT software or a Field Communicator to change the amplitude thresholds. For the Field Communicator, use the HART command [1, 4, 5, 3]. See also "Amplitude threshold settings" on page 104.

RCT allows you to view a plot of the measurement signal along with the current thresholds:

1. From the **View** menu, select the **Plotting** option, or double-click the **Plotting** icon in the **Tools** section of the RCT project bar.
2. Select the Read button .
3. To adjust the amplitude thresholds**,** open the **Tools** section in the RCT project bar and select **Device Commands** > **Details** > **Set Nominal Thresholds**.

Figure 6-4. Waveform Plot Indicating that the Amplitude Threshold for the Interface Peak is Too High

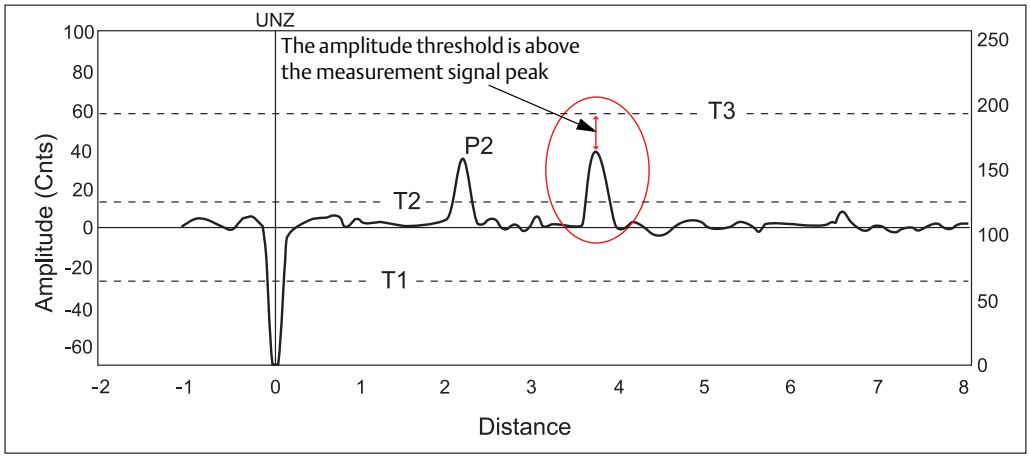

Figure 6-4 on page 97 illustrates a situation where amplitude threshold T3 is too high. The signal amplitude peak at the interface between the upper and lower products is not detected in this case. By adjusting amplitude threshold T3, the peak at the interface between the upper and lower products is detected as illustrated in Figure 6-5:

Figure 6-5. After Changing the Amplitude Threshold the Transmitter Detects the Interface

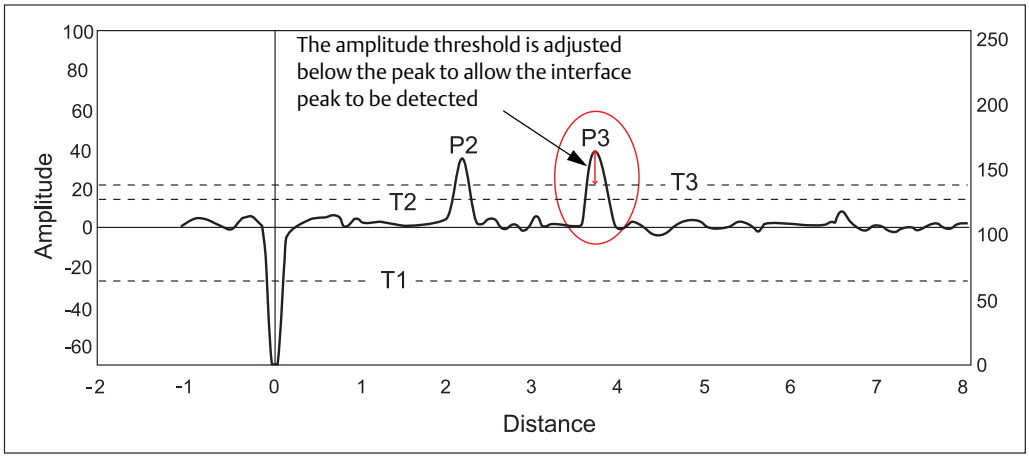

6.2.4 High level rates

The measurement signal is filtered in order to minimize the influence of disturbing noise. In most measurement situations, this does not have a noticeable effect on the response time to level changes. However, if high level rates occur, it may be necessary to reduce the damping value to allow the transmitter to respond quicker. If there is too much noise, the damping value may be increased in order to get a stable measurement signal.

You can use the RCT software or a Field Communicator to change the damping value. For the HART Communicator use the key sequence [1, 3, 5].

In the RCT software, open the **Setup** > **Output** tab and enter the desired damping value:

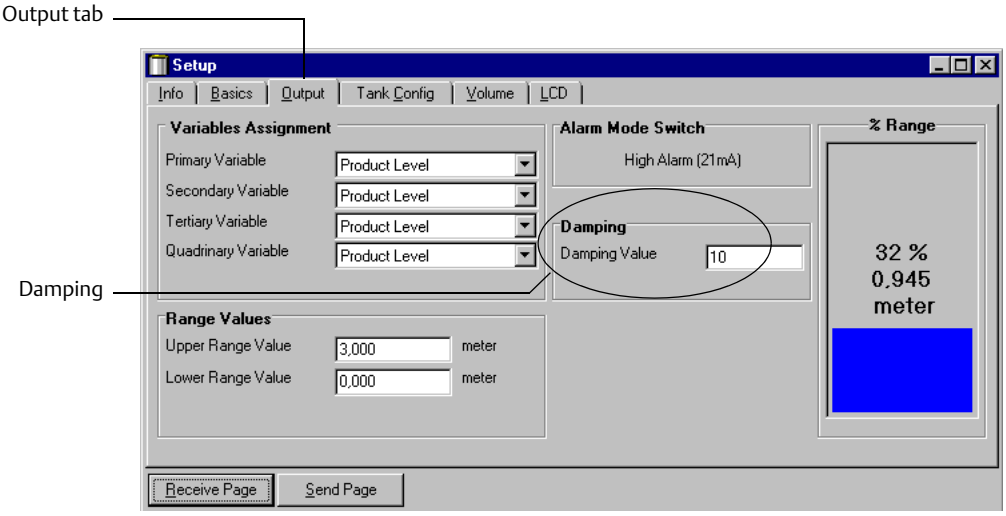

The damping parameter determines how quickly the transmitter responds to level changes and how robust the measurement signal is against noise. Technically, a damping value of 10 means that in 10 seconds the output from the transmitter is about 63% of the new level value. Consequently, when there are rapid level changes in the tank, it may be necessary to decrease the damping value for the transmitter to be able to track the surface. On the other hand, in noisy environments, and if level rates are low, it may be better to increase the damping value to have a stable output signal.

6.2.5 Interface measurements with fully immersed probes

The Rosemount 3300 Series has a measurement option which makes it possible to handle interface measurements when the product level is not visible, for example in a full bridle pipe as illustrated in Figure 6-6. In this case, the probe is fully immersed into the upper product, and only the interface level is detected by the transmitter. Even if the upper product level drops, it is ignored by the transmitter which continues to measure only the interface level, but the measurement accuracy is reduced since the transmitter does not take into account the influence of the air gap above the product surface.

The Measurement Mode parameter is available via the HART command [1, 3, 3, 4]. Select the *Interface when Immersed Probe* option.

Measurement mode *Interface when Immersed Probe* can also be activated in the RCT software:

1. Open the **Setup** window.
2. Select the **Environment** tab.
3. Select Measurement Mode *Interface when Immersed Probe*.
4. Select the **Send Page** button.

Note
Do not use Measurement Mode *Interface when Immersed Probe* in “standard” applications when both interface level and product level are measured.

If the product level drops, the air filled region in the upper part of the pipe will slightly reduce the measurement accuracy of the interface level. To achieve high accuracy in this measurement mode the probe must be fully immersed.

Figure 6-6. Interface Level Measurements in a Full Bridle Pipe

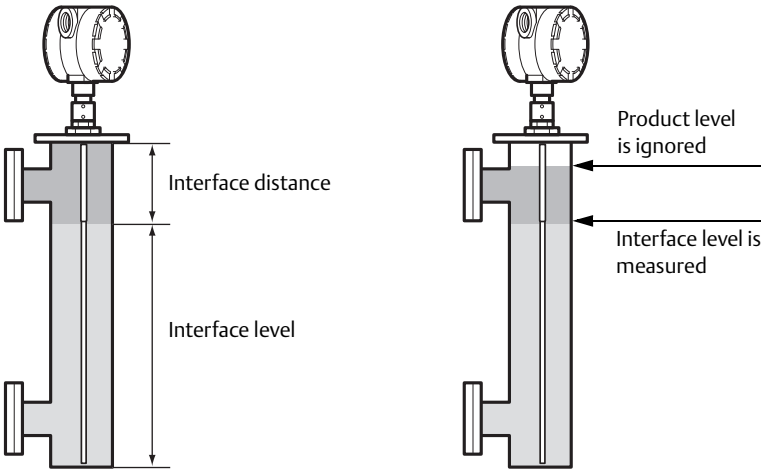

Note
Adjust Threshold T2 if the level pulse is not detected.

6.3 Service

6.3.1 Analog output calibration

To calibrate the analog output current, do the following:

1. Start RCT and make sure the transmitter communicates with the PC (see section Basic Configuration/Start-Up).
2. Under **Tools**, select the **Device Cmds** icon,
   or
   select the **Device Commands** option from the View menu.
3. Open the folder named **Diag** and double-click the **Fixed Current Mode** option.

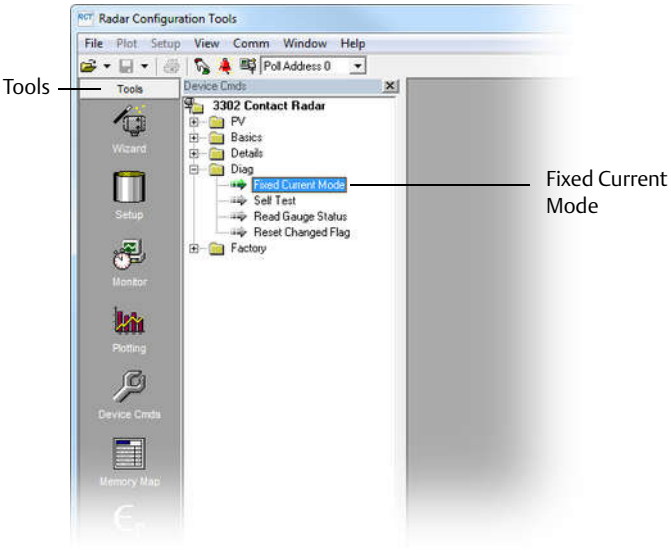

4. Set the output current to 4 mA.

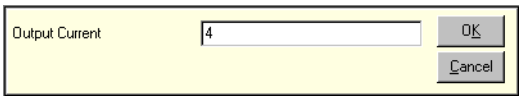

5. Measure the output current.
6. Open the folder named **Details**.
7. Select the **Trim DAC Zero** option and enter the measured output current.
8. In the **Diag** folder, double-click the **Fixed Current Mode** option, and set the output current to 20 mA.
9. Measure the output current.
10. In the **Details** folder double-click the **Trim DAC Gain** option, and enter the measured output current.
11. In the **Diag** folder double-click the **Fixed Current Mode** option, and set the output current to 0 mA in order to leave the **Fixed Current Mode**.

6.3.2 Level and distance calibration

When calibrating the transmitter, it is important that the product surface is calm and the tank is not being filled or emptied.

A complete calibration is performed in two steps:

1. Calibrate distance measurement by adjusting the calibration offset parameter.
2. Calibrate level measurement by adjusting the reference gauge height.

Distance calibration

1. Measure the actual distance between the upper reference point and the product surface.
2. Adjust the calibration offset so that the distance measured by the transmitter corresponds to the actual distance.
   The calibration offset parameter is available via HART command [1, 4, 5, 5],
   or
   RCT: open the **Tools** section in the project bar and select **Device Commands** > **Basics** > **Set Calibration Offset**.

Level calibration

1. Measure the actual product level.
2. Adjust the reference gauge height so that the measured product level corresponds to the actual level.

Figure 6-7. Distance and Level Calibration

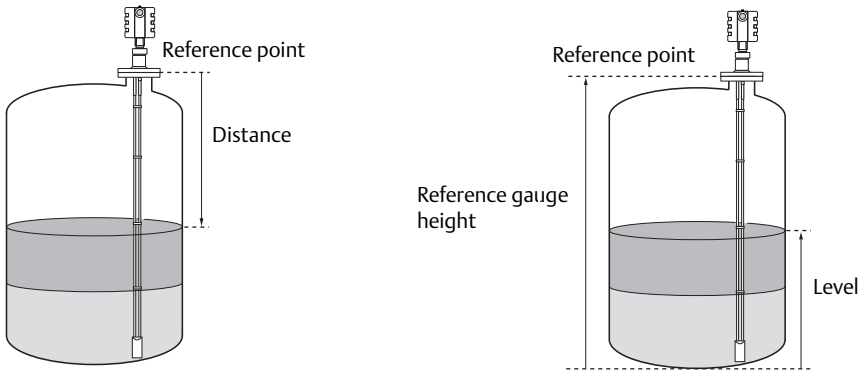

6.3.3 Disturbances at the top of the tank

Using the Trim Near Zone function

For transmitters using the Guided Wave Radar technology, the performance in the Near Zone (referred to as the region between 0-1.6 ft (0-0.5 m) below the upper reference point) is normally somewhat limited. However, the Rosemount 3300 Series Transmitter is equipped with a software functionality that minimizes the upper transition zone. The factory setting is normally sufficient and does not need to be repeated after installation.

However, since the setting is optimized depending on actual installation, further trimming may be necessary in the case of unfavorable conditions. For example, this may be the case if a single lead probe is mounted in a small nozzle, or if there are disturbing obstacles in the near zone. The trimming means that the measurement performance in the near zone is maintained even under these conditions and prevents false echo indication.

To trim the near zone perfomance, do the following:

1. Make sure the product level is below the near zone region (0-1.6 ft (0-0.5 m) below the upper reference point).
2. Start RCT.
3. Select the **Device Commands** option from the View menu.
4. Open the **Details** folder.
5. Select the **Trim Near Zone** option.
6. Select the **Update** option and click **OK**.

Note
The Trim Near Zone function should only be used for reducing impact from constant disturbances. It is not suitable for occasional disturbances.

To reset the transmitter to factory settings do the following:

1. Start RCT.
2. Select the **Device Commands** option from the View menu.
3. Open the **Details** folder.
4. Select the **Trim Near Zone** option.
5. Select the **Reset to Factory Settings** option and click **OK**.

Changing the Upper Null Zone

Measurements are not performed within the Upper Null Zone (UNZ). By setting the UNZ parameter to zero, measurements can be performed in the region close to the flange (near zone). However, it is very important that there are no disturbances in that region if UNZ is set to zero.

If there are measurement problems in the upper part of the tank, you can use the TNZ function as described above.

If the desired measurement range is below the near zone, or if disturbing objects are located below the near zone, the UNZ parameter can be used to avoid measurements above a certain level.

To set the UNZ, do one of the following:

1. Select the HART command [1, 3, 3, 1].
2. Enter the desired value,

or

1. Start the **Radar Configuration Tool** (RCT).
2. Select the **Setup** icon in the RCT workspace project bar.
3. Select the **Probe** tab in the Setup window.
4. Select the **Receive Page** button.
5. Type the desired value in the **Upper Null Zone** field.
6. Select the **Send Page** button. Now the UNZ is stored in the transmitter memory.

Figure 6-8. Upper Null Zone

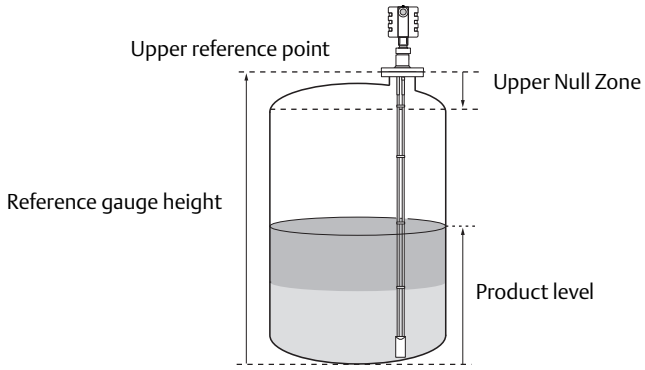

Figure 6-9. Identifying the UNZ in the RCT Waveform Plot

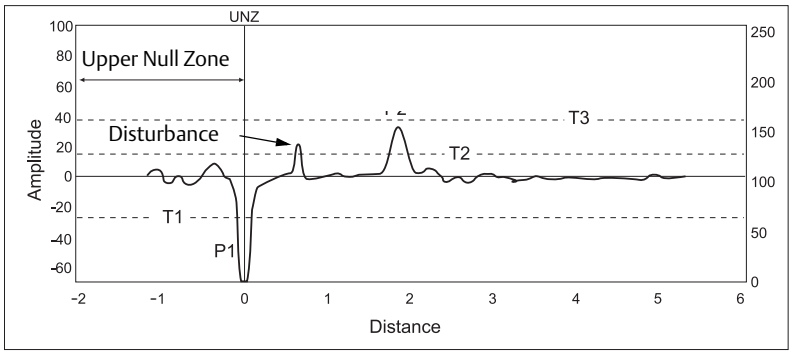

6.3.4 Amplitude threshold settings

The amplitude thresholds are automatically adjusted to appropriate values in order to filter out noise and other non-valid measurements from the measurement signal.

The amplitude of the measurement signal, i.e. the amplitude of the signal that is reflected by the product surface, is related to the actual dielectric constant of the product. The amplitude threshold that is used by the transmitter is based on the parameter configuration of the current product dielectric constant (see Basic Configuration/Start-Up). Normally, no other threshold adjustment is needed, but if the transmitter still does not track the product surface correctly, it may be necessary to adjust the threshold values.

The RCT has a plot function allowing you to view the reflections along the probe.

If the amplitude threshold is too high the product level is not detected, as illustrated in Figure 6-10.

Figure 6-10. Example 1: Amplitude Threshold T2 is Too High

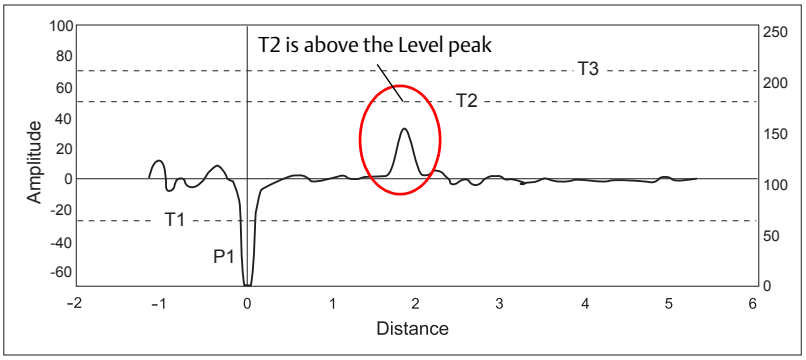

If there are disturbing objects in the tank, the threshold must be carefully set in order to avoid locking on the wrong amplitude peak. In Figure 6-11, the transmitter is locked on a peak above the actual product surface, that is a disturbance was interpreted as the product surface, whereas the actual product surface was interpreted as an interface or the probe end.

Figure 6-11. Example 2: Amplitude Threshold T2 is Too Low

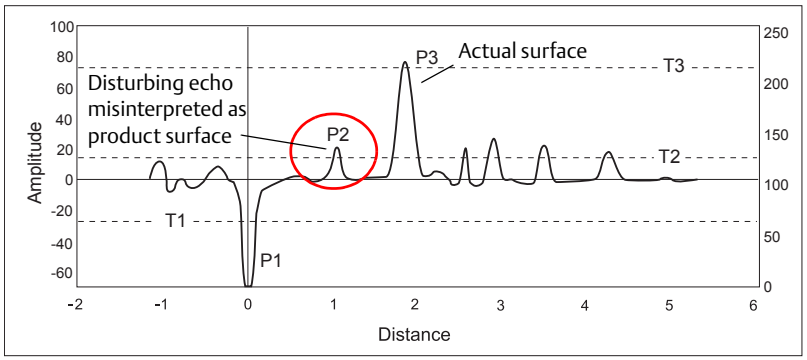

By adjusting the amplitude threshold T2, the product surface is detected correctly, as illustrated in Figure 6-12.

Figure 6-12. Waveform Plot after Threshold T2 was Adjusted

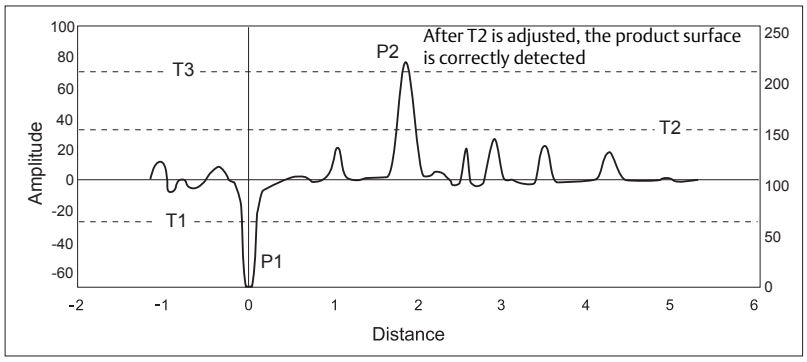

To adjust the amplitude thresholds, select HART command [1, 4, 5, 3]

or

1. Start RCT.
2. Select the **Device Commands** option from the View menu.
3. Open the **Details** folder.
4. Select the **Set Nominal Thresholds** option.

The thresholds T2 and T3 should be set to about 50% of the measured signal amplitude for the product surface and the interface peaks, respectively.

Note
Amplitude thresholds should not be set to values less than 3.

Note
Check that the dielectric constant parameter setting is reasonably close to the actual dielectric constant value of the upper product before changing the amplitude thresholds.

Note
Default amplitude thresholds can be set by typing 0 as the new threshold value.

Using the Field Communicator

To adjust amplitude threshold value:

1. Select HART command [1, 4, 5, 3].
   The different amplitude thresholds appear on the display.

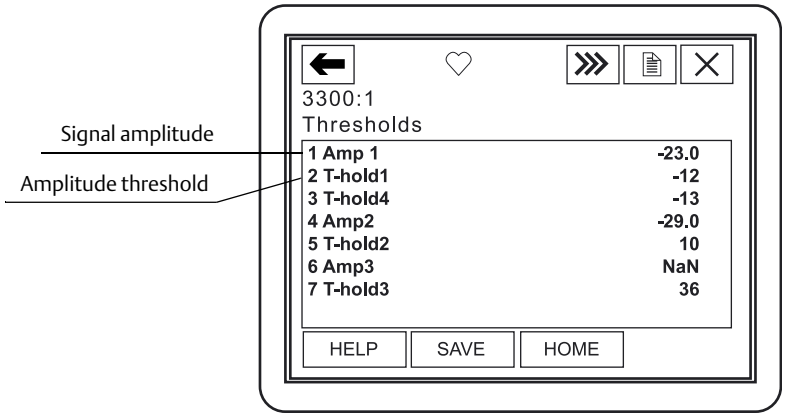

2. Open the desired amplitude threshold for editing.

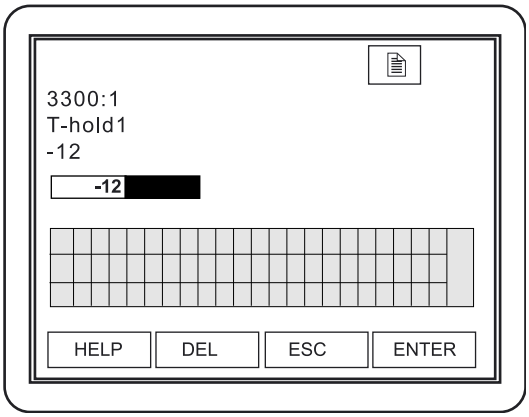

3. Type the desired threshold value and select **ENTER**.
4. Select **SAVE** to store the new value in the transmitter database.

6.3.5 Logging measurement data

To start logging, do the following:

1. Select the **Monitor** icon in the RCT workspace or select the **Monitor** option from the *View* menu.

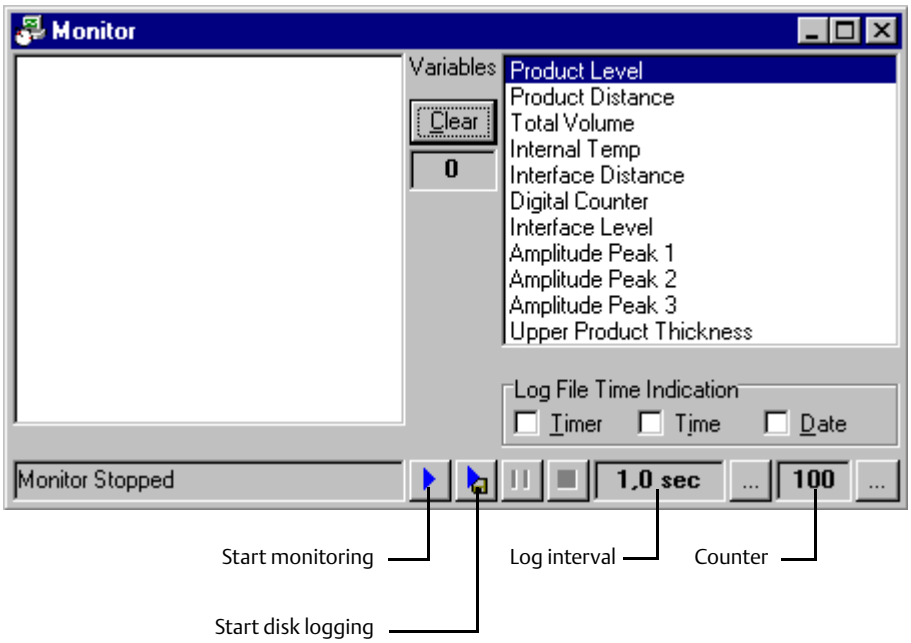

2. Select the desired variables to be monitored and select the **Start Monitor** button.

Saving the log to disk

1. Select the desired variables to be monitored.
2. Select the Log interval button ... and enter a time interval. For example, type 10 if you want data to be logged in every tenth second.
3. Select the **Counter** button and enter the maximum number of files to be stored. The Counter is used to limit the amount of data stored on the hard disk. Each time the maximum number of entries in a log file is reached, the current log file is saved and a new file is created. This procedure continues up to the maximum number of files given by the counter value. The file size is limited to 60,000 entries which can easily be handled by spreadsheet programs like MS Excel.
4. Select the desired options for timer, time, and date. By selecting a check-box, the corresponding time indication is stored for each log entry in the log file.
5. Select the **Start disk logging** button.
6. Select a destination folder and enter a file name.

6.3.6 Saving the transmitter configuration

The RCT offers different methods to save the current transmitter configuration:

- Save only the configuration specified in the **Setup** window.
- Use the more extensive function in the **Memory Map** window.

You can use a stored configuration file as a backup of the current configuration, or it can be distributed for service purposes.

To save the current transmitter setup, do the following:

1. Select the **Setup** icon in the RCT workspace or select the **Setup** option from the **View** menu to open the Setup window.

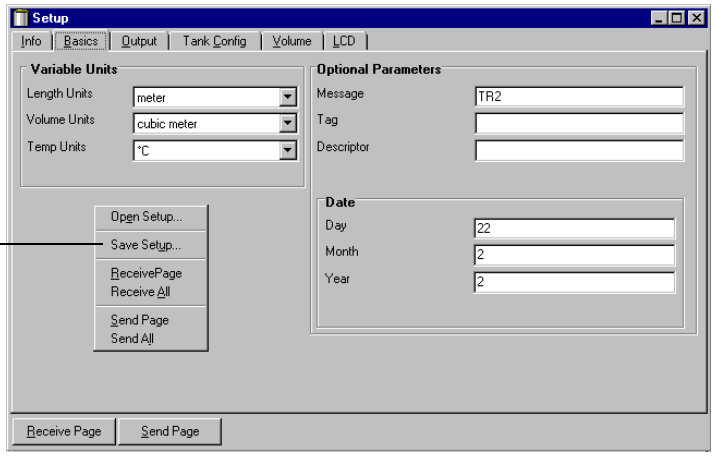

2. Click the right mouse button and select the **Receive All** option,
   or
   From the Setup menu, select the **Receive All** option.
   Alternatively, you can use the Receive Page option on each individual page.

Note
All pages must be received before the setup can be saved.

3. Click the right mouse button and select the **Save Setup** option.

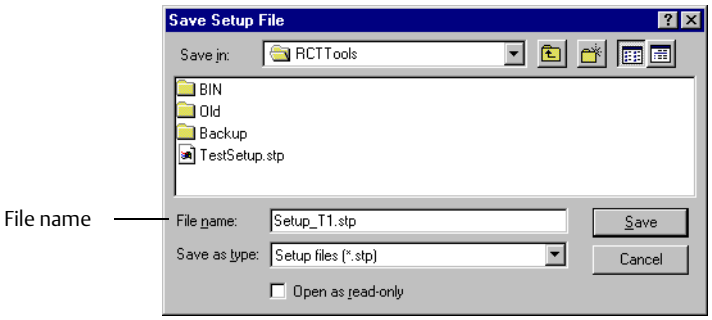

4. Select a destination folder and enter a file name.

5. Select **Save**.

To load a setup

1. Select **Setup** in the RCT workspace or select the **Setup** option from the **File** menu.

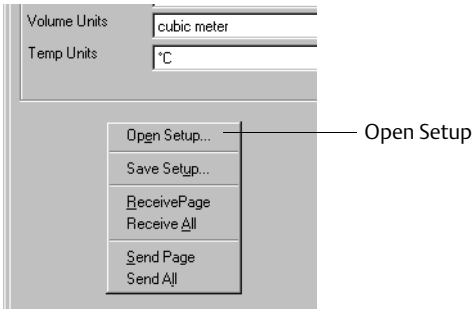

2. In the Setup window, click the right mouse button, and select the **Open Setup** option, or
   From the File menu, select the **Open Setup** option.
3. Open the source folder and select the desired setup file.
4. Select **Open**.

Memory Map

The **Memory Map** window allows you to view the current transmitter database registers. It is also possible to save the current database for backup or service purposes, and it is also possible to download a backup database to the transmitter. To save configuration data in the Memory Map window:

1. Start the RCT program.
2. Select the **View > Memory** option, or select the **Memory Map** icon in the RCT workspace (Advanced section at the left side of the workspace window).
3. Select the **All EE** option from the drop-down list.
4. Select **Receive**. (It may take a few minutes to read the database).
5. Click the right mouse button and select the **Save Memory As** option.
6. Type the desired file name and select **OK**. Now the current database is stored.

See the online help in RCT for further information on how to open a saved database and how to download a database to the transmitter.

6.3.7 Removing the transmitter head

Note
See the safety information on page 93 before removing the transmitter head.

FLANGE VERSION

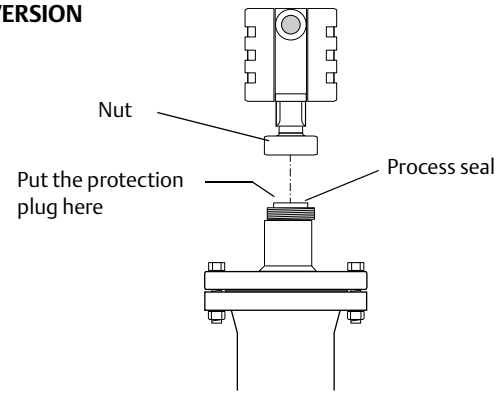

1. Loosen the nut that connects the transmitter housing to the process seal.
2. Lift the transmitter head carefully.
3. Make sure the upper surface of the process seal is clean and the spring-loaded pin at the center of the process seal is properly inserted (the pin should move back when pushed into the hole).
4. Attach the protection plug to the process seal.

THREADED VERSION

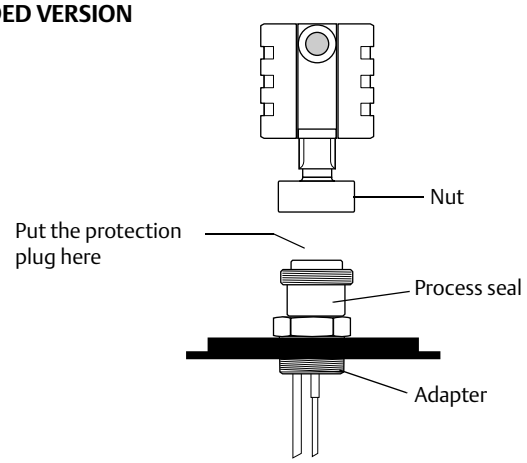

Note
Do not remove the process seal from the adapter!

6.3.8 Changing the probe

Note
See the safety information on page 93 before changing the probe.

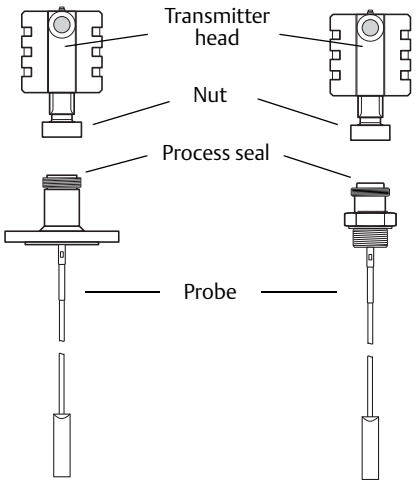

1. Loosen the nut.
2. ⚠ Remove the transmitter head from the old probe.
3. On the new probe, make sure the protection plug is removed and the upper surface of the process seal is clean. Also make sure that the spring-loaded pin at the center of the process seal is properly inserted.
4. Mount the transmitter head on the new probe.
5. Fasten the nut again.
6. If the new probe is not of the same type as the old one, update the transmitter configuration by setting the probe type parameter to the appropriate value:
   HART Fast Key sequence [1, 3, 2, 3],
   or
   RCT Setup/Probe.
7. Measure the probe length and enter the measured value:
   HART Fast Key sequence [1, 3, 2, 2],
   or
   RCT Setup/Probe.
8. Verify that the transmitter is calibrated.

Note
Flexible and rigid probes require different radar electronics and cannot be used with the same transmitter head.

6.4 Diagnostic messages

6.4.1 Troubleshooting

If there is a malfunction despite the absence of diagnostic messages, see Table 6-1 for information on possible causes.

Table 6-1. Troubleshooting Chart

Symptom	Possible cause	Action
No HART communication.	• COM Port configuration does not match the connected COM port. • Cables may be disconnected. • Wrong HART address is used. • Hardware failure.	• Check that the correct COM Port is selected in the HART server (see "Specifying the COM port" on page 75). • Check wiring diagram. • Verify that the 250 Ω resistor is in the loop. • Check cables. • Make sure the correct HART short address is used. Try address=0. • Check Analog Output current value to verify that transmitter hardware works.
Analog out is set in alarm.		Use the command "Read Gauge Status" to check active errors.
Both P2 and P3 are detected but Interface Level is reported as Not A Number (NAN) in the waveform plot.	Measurement Mode is set to "Level Only".	Set Measurement Mode to "Level and Interface" (see "Basic configuration" on page 69).
Both level and interface level are reported as NAN.	Probe is not connected.	Use the command "Read Gauge Status" and check if error "Probe Failure" is active. If this is the case, check the probe connection.
Both P2 and P3 are detected but the interface level is equal to the product Level.	• P3 is identified as a double bounce. • P2 and P3 are very close.	Adjust thresholds T2 and T3, see "Amplitude threshold settings" on page 104 for more information.
P2 is detected but level is incorrectly reported as full or empty.		Use the command "Read Gauge Status" and check if the warning "Probe Immersed" is active. If this is the case, check that: • the transmitter is configured with correct probe type, • the reference pulse (P1) is below amplitude threshold T4. If not, adjust T4 to an appropriate value.
The reference pulse is not detected.	• The tank is full. • The transmitter is configured with wrong probe type. • Amplitude Threshold T1 is not correct.	• Check the product level. • Check that the correct probe type is configured. • Check amplitude threshold T1.
Level accuracy seems off.	• Configuration error.	• Check the reference gauge height parameter. • Check status information and diagnostic information.
Integral display does not work.		• Check the display configuration. • Check loop power. • Check display connection.

6.4.2 Errors

Table 6-2 is a list of diagnostic messages that may be displayed on the integral display, on the Field Communicator, in AMS® Suite, or by the RCT software. Errors normally result in an analog output alarm.

Errors are indicated in RCT by the message "Transmitter Malfunction":



To see the error message, do one of the following:

- Select the **Read Gauge Status** icon in the toolbar at the top of the RCT workspace.
- 1. Open the **Tools** section in the RCT workspace project bar and select the **Device Cmds** icon,
  or
  select the **Device Commands** option from the View menu.
  2. Open the folder named **Diag** and double-click the **Read Gauge Status** option.

Table 6-2. Error Messages

Message	Description	Action
Invalid configuration. LCD error code: CNFIG.	At least one configuration parameter is outside the allowed range. Note: the default values are used until the problem is solved.	• Load default database and restart the transmitter. • Contact Rosemount service department if the problem persists.
RAM failure was detected during startup test. LCD error code: 00001.	The transmitter performs an immediate reset.	Contact Rosemount service department.
FPROM failure was detected during startup test.	The transmitter performs an immediate reset.	Contact Rosemount service department.
Waveform acquisition failure. LCD error code: 00006.	This error is probably caused by hardware failure.	Contact Rosemount service department.
EEPROM factory checksum. LCD error code: 00007.	Checksum error in the factory configuration parameters. Can be caused by power failure during configuration or by hardware error. Note: the default values are used until the problem is solved.	Contact Rosemount service department.
EEprom user checksum error. LCD error code: 00008.	Caused by error in the User Configuration parameters. Can be caused by power failure during configuration or by hardware error. Note: the default values are used until the problem is solved	• Load default database and restart the transmitter. • Contact Rosemount service department if the problem persists.
Software error. LCD error code: 00010.		Contact Rosemount service department.
Probe failure. LCD error code: 00013.	Probe is not detected.	Check that the probe is correctly mounted (see "Changing the probe" on page 111).

6.4.3 Warnings

Table 6-3 is a list of diagnostic messages that may be displayed on the Integral Display, on the Field Communicator, or by the RCT software. Warnings are less serious than errors, and in most cases do not result in analog output alarms.

Warnings are indicated by a message at the bottom of the RCT workspace. To see the warning message, do one of the following:

- Select the **Read Gauge Status** icon  in the toolbar at the top of the RCT workspace.
- 1. Open the **Tools** section in the RCT workspace project bar and select the **Device Cmds** icon,
  or
  select the **Device Commands** option from the View menu.
  2. Open the folder named **Diag** and double-click the **Read Gauge Status** option.

Table 6-3. Warning Messages

Message	Description	Action
Reference pulse not found.	Possible cause: • Reference pulse immersed in high dielectric liquid. • Wrong threshold level T1. • Hardware error.	• View the waveform plot and check amplitude threshold T1. • Check that the tank is not overfull.
No level pulse is found.	Possible cause: • Wrong threshold level T2. • Liquid level in transition zone or below probe end.	• View the waveform plot and check amplitude threshold T2.
Interface pulse not found.	Possible cause: • Wrong threshold level T3. • Interface level too close to the upper product level. • No level pulse detected.	• View the waveform plot and check amplitude threshold T3.
Internal temperature out of range.	-40 ºC < Internal Temperature < 85 ºC.	Contact Rosemount service department.
Volume computation warning.	• Volume configuration error. • Strapping table error.	• Check that the correct tank type is selected for volume configuration. • Check that the tank dimensions for volume are correct. • If strapping table is used, check the level vs. volume points.
Immersed probe.	• Wrong threshold level T4. • Reference pulse immersed in liquid.	• View the waveform plot and check amplitude threshold T4.

Appendix A Reference Data

Functional specification 115
Performance specification 126
Physical specification 132
Dimensional drawings 142
Ordering information 152

A.1 Functional specification

A.1.1 General

Field of application

Liquids and semi-liquids level or liquid/liquid interfaces

- Model 3301, for level or submerged probe interface measurement
- Model 3302, for level and interface measurements

Measurement principle

Time Domain Reflectometry (TDR)

(See Figure 2-1 on page 7 for a description of how it works)

Microwave output power

Nominal 50 μW, Max. 2 mW

Telecommunication (FCC and R&TTE)

FCC part 15 (1998) subpart B and R&TTE (EU directive 99/5/EC). The Rosemount 3300 Series is considered to be an *unintentional radiator* under the Part 15 rules.

Humidity

0 to 100% relative humidity

Start-up time

< 10 s

A.1.2 4–20 mA HART® (output option code H)

See Ordering Information in Table A.6 on page 152.

A.1.3 Output

Two-wire, 4–20 mA. Digital process variable is superimposed on 4–20 mA signal, and available to any host that conforms to the HART protocol (HART rev. 5). The HART signal can be used in a multidrop mode.

Figure A-1. Rosemount 3300 Series Wiring

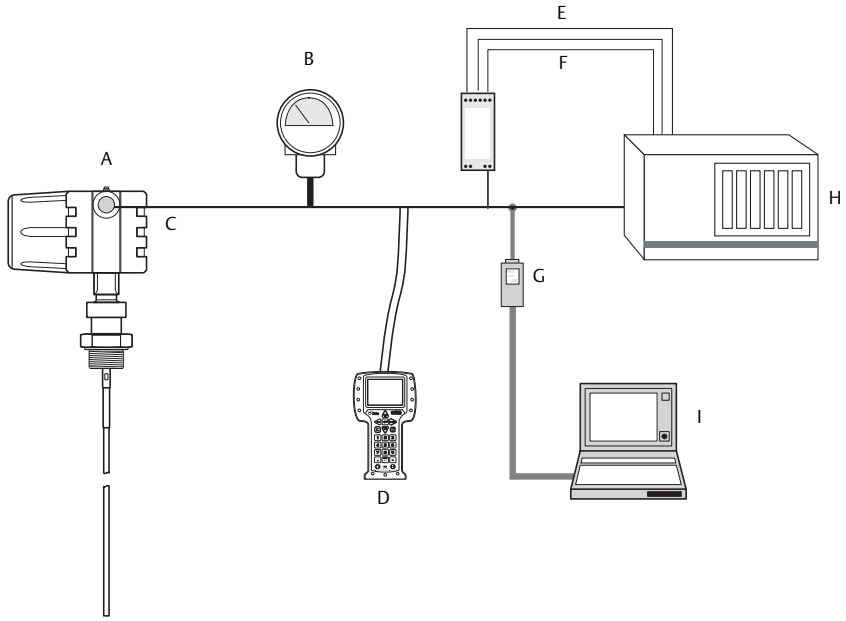

A Rosemount 3300 Series Transmitter
B Rosemount 751 Field Signal Indicator
C 4-20 mA/HART
D Field Communicator
E 3 x 4-20 mA
F Rosemount 333 HART Tri-Loop™
G HART modem
H Control system
I Radar Configuration Tools or AMS® Device Manager

HART Tri-Loop

By sending the digital HART signal to the optional HART Tri-Loop, it is possible to have up to three additional 4–20 mA analog signals. See the Rosemount 333 HART Tri-loop Product Data Sheet (document number 00813-0100-4754) for additional information.

Figure A-2. HART Tri-Loop



Smart Wireless THUM™ adapter

The optional THUM adapter can be mounted directly on the transmitter or by using a remote mounting kit. IEC 62591 (*Wireless*HART) enables access to multi-variable data and diagnostics, and adds wireless to almost any measurement point. See the Rosemount Smart Wireless THUM adapter Product Data Sheet (document number 00813-0100-4075) and Smart Wireless THUM Adapter for Rosemount Process Level Transmitter Applications (document number 00840-0100-4026).

Figure A-3. Smart Wireless THUM Adapter



External power supply

The input voltage (U_i) for HART is 11 to 42 Vdc (11 to 30 Vdc in IS applications, and 16 to 42 Vdc in Explosion-proof/Flameproof applications).

For flameproof/explosion-proof installations the Rosemount 3300 Series Transmitters have a built-in barrier; no external barrier needed.

When a Smart Wireless THUM adapter is fitted, it adds a maximum drop of 2.5 Vdc in the connected loop.

- R = load resistance (Ω)
- U_E = external power supply voltage (Vdc)
- U_I = input voltage (Vdc)

Figure A-4. External Power Supply for HART

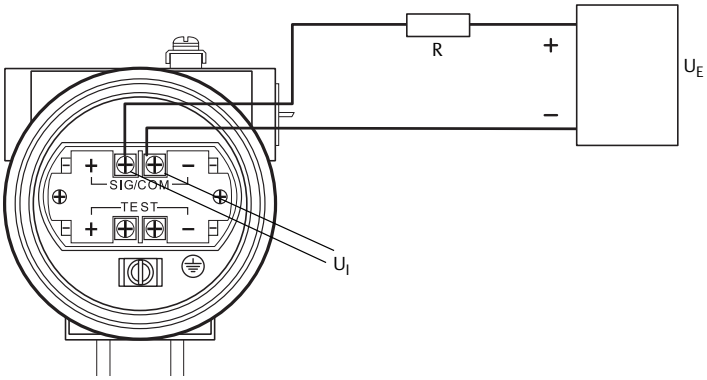

IS electrical parameters

U_i = 30 V, I_i = 130 mA, P_i = 1 W, L_i = 0, C_i = 0

Signal on alarm

Standard: Low = 3.75 mA. High = 21.75 mA

Namur NE43: Low = 3.6 mA. High = 22.5 mA

Saturation levels

Standard: Low = 3.9 mA. High=20.8 mA

Namur NE43: Low = 3.8 mA. High = 20.5 mA

Load limitations

Maximum load resistance is determined by the voltage level of the external power supply, as described by Figure A-5, Figure A-6 and Figure A-7.

- U_E = external power supply voltage
- R (Ω) = maximum load resistance

Figure A-5. Non-Hazardous Installations

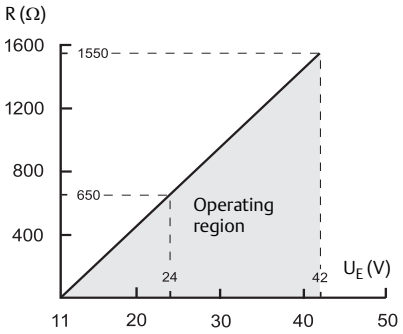

Figure A-6. Intrinsically Safe Installations

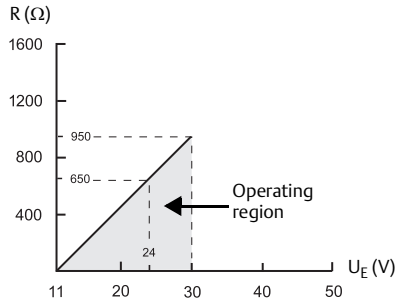

Figure A-7. Explosion-Proof/Flameproof (Ex d) Installations

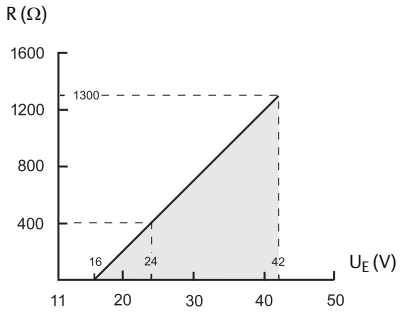

Note
For the Ex d case, the diagram is only valid if the HART load resistance is at the + side, otherwise the load resistance value is limited to 300 Ω.

A.1.4 Modbus® (output option code M)

See Ordering Information Table A.6 on page 152.

Output

The RS-485 Modbus version communicates by Modbus RTU, Modbus ASCII, and Levelmaster protocols.

- 8 data bits, 1 start bit, 1 stop bit, and software selectable parity.
- Baud rate: 1200, 2400, 4800, 9600 (default), and 19200 bits/s.
- Address range: 1 to 255 (default device address is 246).

HART communication is used for configuration via the HART terminals or tunneling via the RS-485.

Figure A-8. Rosemount 3300 Series Wiring Using a Modbus Converter

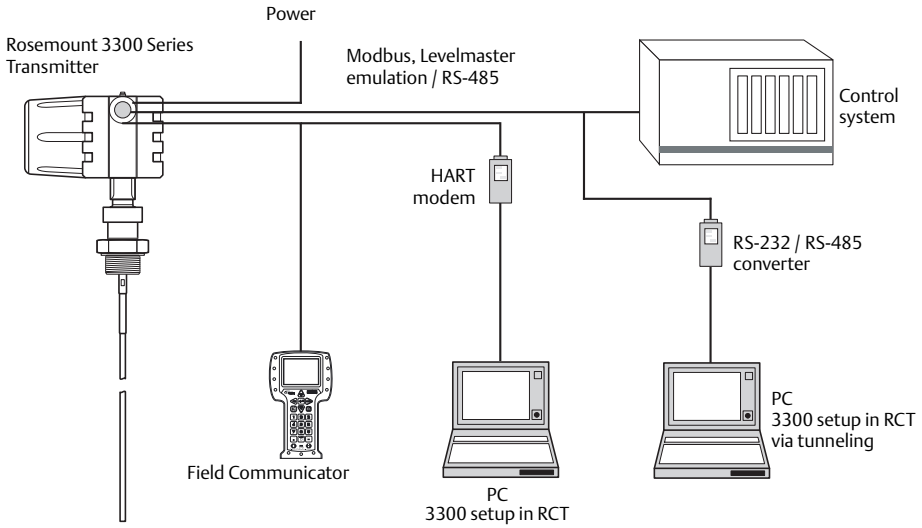

External power supply

The input voltage (U_I) for Modbus is 8 to 30 Vdc.

Power consumption:

- < 0.5 W (with HART address = 1)
- < 1.2 W (incl. four HART slaves)

For flameproof/explosion-proof installations the Rosemount 3300 Series Transmitters have a built-in barrier; no external barrier needed.

Figure A-9. External Power Supply for Modbus

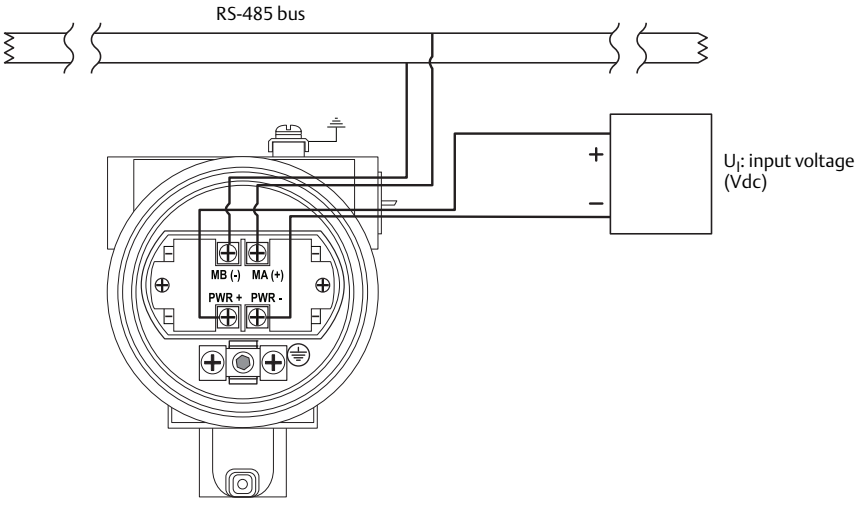

A.1.5 Display and configuration

Integral display (option code M1)

The integral display toggles between the following variables:

- level
- distance
- volume
- internal temperature
- interface distance
- interface level
- peak amplitudes
- interface thickness
- percent of range
- analog current output

Note
The integral display cannot be used to configure the transmitter.

Remote display

Data can be read remotely by using the four-digit Rosemount 751 Field Signal Indicator. For further information, see the Rosemount 751 Product Data Sheet (document number 00813-0100-4378).

Configuration tools

Emerson Field Communicator (e.g. 375/475 Field Communicator), Radar Configuration Tools (RCT) software package for PC (included with delivery of transmitter), or Emerson AMS Device Manager for PC, or DeltaV™, or any other DD (Device Description) compatible host systems.

- DTM (compliant with version 1.2 of the FDT/DTM specification) is also available supporting configuration in for instance Yokogawa® Fieldmate/PRM, E+H™ FieldCare, and PactWare™
- To communicate using RCT or AMS Device Manager, a HART modem is required. The HART modem is available as an RS232 or USB version (see page 152)
- The transmitter can be pre-configured by selecting Options, Option Code C1 (page 156) and sending a completed Configuration Data Sheet (CDS). The CDS is available from www.rosemount.com.

Output units

For level interface, and distance:

- ft
- inch
- m
- cm
- mm

For volume:

- ft^3
- $inch^3$
- US gals
- Imp gals
- barrels
- yd^3
- m^3
- liters

Output variables

Rosemount 3301:

- level
- distance (to product surface)
- volume
- internal temperature
- peak amplitudes

For submerged probe interface measurements:

- interface level
- interface distance)

Rosemount 3302:

- level
- distance (to product surface)
- volume
- interface level
- interface distance
- upper product thickness
- internal temperature
- peak amplitudes

Damping

0 to 60 s (10 s is the default value)

A.1.6 Temperature limits

Ambient temperature

The maximum and minimum ambient temperature for the electronics depends on the process temperature *and* on the approval (see "Product Certifications" on page 159).

The temperature range for the optional Integral Display is –40 °F (–40 °C) to 185 °F (85 °C)

To lower the temperature around the electronics, a remote mounting connection can be used. The maximum temperature for the remote housing connection at the vessel connection point is 302 °F (150 °C).

Storage temperature

–40 to 176 °F (–40 to 80 °C)

A.1.7 Process temperature and pressure rating

Process temperature

The final rating depends on flange and O-ring selection. Table A-1 on page 125 gives the temperature ranges for standard tank seals with different O-ring materials.

Figure A-10. Max. Rating, Standard Tank Connection

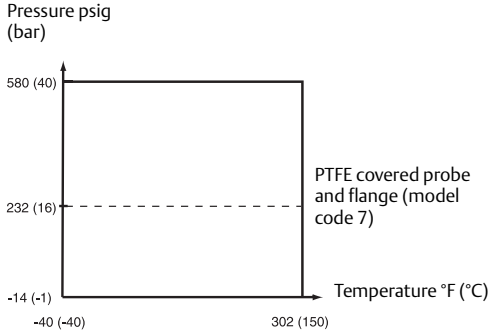

- The maximum product temperature is at the lower part of the flange.
- The maximum temperature for the remote housing connection at the vessel connection point is 302 °F (150 °C).
- The flanges, except for the Fisher and Masoneilan flanges, are triple certified for the materials 316, 316L, and EN 1.4404.
- The pressure rating is valid only for 316L.

ASME / ANSI flange rating

316 and 316L SST flanges according to ASME B16.5 Table 2-2.3. Max. 302 °F/580 psig (150 °C/40 bar).

EN flange rating

1.4404 according to EN 1092-1 material group 13E0. Max. 302 °F/580 psig (150 °C/40 bar).

Fisher & Masoneilan flange rating

316 and 316L SST flanges according to ASME B16.5 Table 2-2.3. Max. 302 °F/580 psig (150 °C/40 bar).

JIS flange rating

316 and 316L SST flanges according to JIS B2220 material group 2.3. Max. 302 °F/580 psig (150 °C/40 bar).

Tri-Clamp rating

Maximum pressure is 16 bar for 1 1/2-in. (37.5 mm) and 2-in. (50 mm) housing; and 10 bar for 3-in. (75 mm) and 4-in. (100 mm) housing. The final rating depends on the clamp and gasket.

Plate design

Certain models of flanged Alloy and PTFE covered probes have a tank connection design with a protective flange plate of the same material as the probe and with a backing flange in 316 or 316L / EN 1.4404. The protective flange plate prevents the backing flange from being exposed to the tank atmosphere.

For Alloy C-276 and Alloy 400, probes with flange plate design are available up to Class 300/PN 40.

For PTFE, probes with flange plate design are available up to Class 150/PN 16.

Flange connection rating

See Table A-2 for the conditions used for flange strength calculations.

A.1.8 Interface measurements

Considerations

The Rosemount 3302 is a good choice for measuring the interface of oil and water, or other liquids with significant dielectric differences. It is also possible to measure interfaces with a

Rosemount 3301 in applications where the probe is fully submerged in the liquid. If interface is to be measured, follow these criteria:

- The dielectric constant of the upper product must be known and should not vary. The RCT software has a built-in dielectric constant calculator to assist the user in determining the dielectric constant of the upper product.
- The dielectric constant of the upper product must have a lower dielectric constant than the lower product to have a distinct reflection.
- The difference between the dielectric constants for the two products must be larger than 10.
- Max. dielectric constant for the upper product is 10 for the coaxial probe and 5 for twin lead probes.
- The upper product thickness must be larger than 8 in. (0.2 m) for the flexible twin lead probe; 4 in. (0.1 m) for the rigid twin lead, and coaxial probes in order to distinguish the echoes of the two liquids.
- Sometimes there is an emulsion layer (mix of the products) between the two products which can affect interface measurements. For guidelines on emulsion situations, consult your local Emerson Process Management representative.

Figure A-11. Interface Measurement with a Rosemount 3302 and a Rosemount 3301 (Fully Submerged Probe)

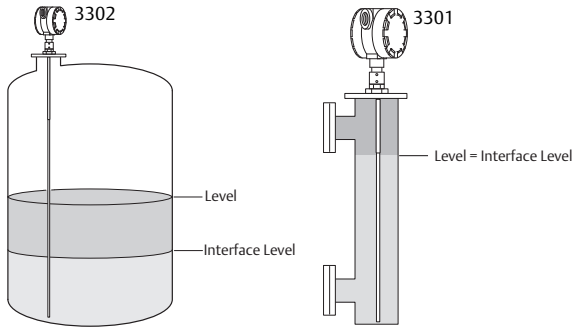

Table A-1. Temperature Ranges for Standard Tank Seals with Different O-ring Materials

Tank seal with different O-ring material	Min. temperature °F (°C) in air	Max. temperature °F (°C) in air
Viton® Fluoroelastomer	5 (-15)	302 (150)
Ethylene Propylene	-40 (-40)	266 (130)
Kalrez® 6375 Perfluoroelastomer	14 (-10)	302 (150)
Nitrile Butadiene (NBR)	-31 (-35)	230 (110)

Note
Always check the chemical compatibility of the O-ring material with your application.

Table A-2. Conditions Used for Flange Strength Calculations

	Bolting material	Gasket	Flange material	Hub material
ASME / ANSI	SST SA193 B8M Class 2	Soft (1a) with min. thickness 1.6 mm	SST A182 Gr. F316L and EN 10222-5-1.4404	SST SA479M 316L and EN 10272-1.4404
EN, JIS	EN 1515-1/-2 group 13E0, A4-70	Soft (EN 1514-1) with min. thickness 1.6 mm		

A.2 Performance specification

A.2.1 General

Reference conditions

Twin lead probe, 77 °F (25 °C) water

Reference accuracy

- ± 0.2 in. (5 mm) for probes ≤ 16.4 ft. (5 m)
- ± 0.1% of measured distance for rigid probes >16.4 ft. (5 m)
- ± 0.15% of measured distance for flexible probes >16.4 ft. (5 m)

Repeatability

± 0.04 in. (1 mm)

Ambient temperature effect

Less than 0.01% of measured distance per °C

Update interval

1 per second

A.2.2 Measuring range

Transition zones

These zones are areas where measurements are non-linear or have reduced accuracy. If measurements are desired at the very top of a tank, it is possible to mechanically extend the nozzle and use a coaxial probe. The upper transition zone is then moved into the extension. See Table A-3 on page 127.

Table A-3. Transition Zones

	Dielectric constant	Rigid single lead / segmented rigid single lead	Flexible single lead	Coaxial	Rigid twin lead	Flexible twin lead
Upper[1] transition zone	80	4 in. (10 cm)	5.9 in. (15 cm)	4 in. (10 cm)	4 in. (10 cm)	5.9 in. (15 cm)
	2	4 in. (10 cm)	20 in. (50 cm)	4 in. (10 cm)	4 in. (10 cm)	8 in. (20 cm)
Lower[2] transition zone	80	2 in. (5 cm)	2 in. (5 cm)[3][4]	1.2 in. (3 cm)	2 in. (5 cm)	2 in. (5 cm [4])
	2	4 in. (10 cm) [5]	6.3 in. (16 cm) - long weight, short weight, and chuck[4][5]	2 in. (5 cm)	2.8 in. (7 cm)	5.9 in. (15 cm)[4][5]

(1) The distance from the upper reference point where measurements have reduced accuracy.
(2) The distance from the lower reference point where measurements have reduced accuracy.
(3) The measuring range for the PTFE covered Flexible Single Lead probe includes the weight when measuring on a high dielectric media.
(4) Note that the weight length or chuck fastening length adds to non-measurable area and is not included in the diagram. See "Dimensional drawings" on page 142.
(5) When using a metallic centering disc, the lower transition zone is 8 in. (20 cm), including weight if applicable. When using a PTFE centering disc, the lower transition zone is not affected.

Note
The 4-20 mA set points are recommended to be configured between the transition zones, within the measuring range.

Figure A-12. Transition Zones

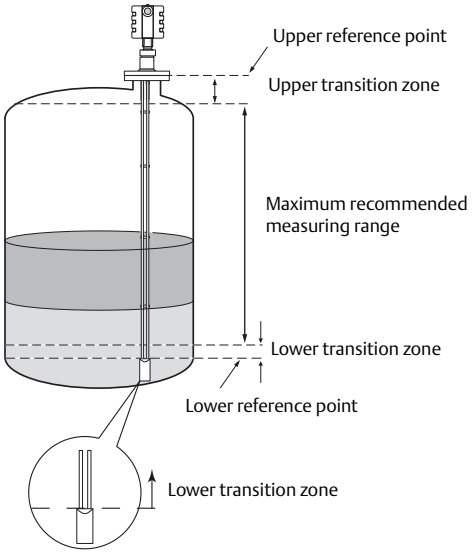

Figure A-13. Lower Transition Zone

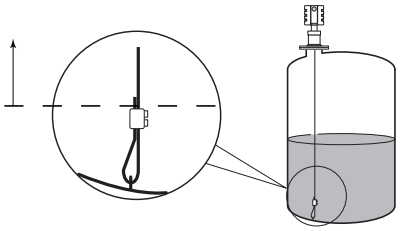

For a flexible single lead probe with chuck, the lower transition zone is measured upwards from the upper part of the clamp.

Measuring range and minimum dielectric constant

16 in. (0.4 m) to 77 ft. (23.5 m)

See Table A-4 for each probe's measuring range and minimum dielectric constant. Due to the measuring range depending on the application and factors described below, the values are guidelines for clean liquids. For more information, ask your local Emerson Process Management representative.

Table A-4. Measuring Range and Minimum Dielectric Constant

	Rigid single lead / segmented rigid single lead	Flexible single lead	Coaxial	Rigid twin lead	Flexible twin lead
Maximum measuring range	9 ft 10 in. (3 m) for 8 mm probes (code 4A) 19 ft 8 in. (6 m) for 13 mm probes (code 4B, 4S)	77 ft 1 in. (23.5 m)	19 ft 8 in. (6 m)	9 ft 10 in. (3 m)	77 ft 1 in. (23.5 m)
Minimum dielectric constant	2.5 (or 1.7 if installed in a metallic bypass or stilling well)(1)	2.5 up to 36 ft (11 m)(2) 5.0 up to 66 ft (20 m) 7.5 up to 77 ft 1 in. (23.5 m)	1.5	1.9	1.6 up to 33 ft (10 m) 2.0 up to 66 ft (20 m) 2.4 up to 77 ft 1 in. (23.5 m)

(1) May be lower depending on installation.
(2) In pipes with a diameter less than 8 in. (20 cm), the minimum dielectric constant is 2.0.

Table A-5. Measuring Range and Minimum Dielectric Constant When Using Remote Housing

	Rigid single lead / segmented rigid single lead	Flexible single lead	Coaxial	Rigid twin lead	Flexible twin lead
Maximum measuring range	9 ft. 10 in. (3 m) - for 8 mm probes (code 4A) 14 ft. 9 in. (4.5 m) - for 13 mm probes (code 4B, 4S)	72 ft. (22 m)	19 ft. 8 in. (6 m)	9 ft. 10 in. (3 m)	72 ft. (22 m)
Minimum dielectric constant with 1 m remote housing	2.7 (2.0 if installed in a metallic bypass or stilling well)(1)	2.7 up to 36 ft. (11 m) 6 up to 66 ft. (20 m) 10 up to 72 ft. (22 m)	1.5	2.1	1.7 up to 33 ft. (10 m) 2.2 up to 66 ft. (20 m) 2.6 up to 72 ft. (22 m)
Minimum dielectric constant with 2 m remote housing	3.3 (2.2 if installed in a metallic bypass or stilling well)(1)	3.2 up to 36 ft. (11 m) 8 up to 67 ft. (20.5 m)	1.6	2.5	1.8 up to 33 ft. (10 m) 2.4 up to 67 ft. (20.5 m)
Minimum dielectric constant with 3 m remote housing	3.8 (2.5 if installed in a metallic bypass or stilling well)(1)	3.7 up to 36 ft. (11 m) 11 up to 62 ft. (19 m)	1.7	2.8	2.0 up to 33 ft. (10 m) 2.7 up to 62 ft. (19 m)

(1) May be lower depending on installation.

Different parameters (factors) affect the echo and therefore the maximum measuring range differs depending on application according to:

- Disturbing objects close to the probe
- Media with higher dielectric constants (ε_r) give better reflection and allow a longer measuring range
- Surface foam and particles in the tank atmosphere may affect measuring performance
- Heavy coating or contamination on the probe should be avoided since it can reduce measuring range and might cause erroneous level readings

Note
See Table A-5 on page 129 for the measuring range when using the remote housing.

Interface measuring range

Target applications include interfaces between oil; oil-like and water; and water-like liquids with a low (< 3) upper product dielectric constant and a high (>20) lower product dielectric constant. For such applications, the maximum measuring range is only limited by the length of the coaxial, rigid twin, and rigid single lead probes.

For the flexible twin lead probe, the maximum measuring range will be reduced depending on the maximum upper product thickness according to the diagram (inset, right).

Example: If the upper product dielectric constant is 2, and the upper product thickness is 5 ft. (1.5 m), the maximum measuring range is 75.5 ft. (23 m).

However, characteristics vary between different applications.

Figure A-14. Maximum Measuring Range, Flexible Twin Lead Probe

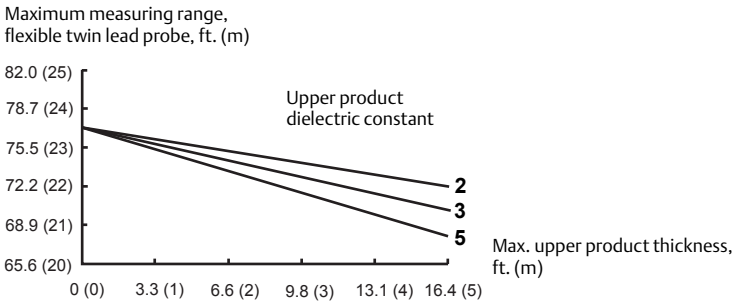

Note
For other product combinations, consult your local Emerson Process Management representative.

A.2.3 Environment

Vibration resistance

Polyurethane-covered aluminum housing: IEC 60770-1. SST housing: IACS E10

Electromagnetic compatibility

Emission and Immunity: meets EN 61326-1 (2006) and amendment A1, class A equipment intended for use in industrial locations if installed in metallic vessels or still-pipes.

When rigid/flexible single and twin lead probes are installed in non-metallic or open vessels, influence of strong electromagnetic fields might affect measurements

Built-in lightning protection

Meets EN 61000-4-4 Severity Level 4 and EN 61000-4-5 Severity Level 4

Coating

See Table A-6 on page 131.

- Single lead probes are preferred when there is a risk for contamination (because coating can result in product bridging across the two leads for twin versions; between the inner lead and outer pipe for the coaxial probe)
- PTFE probes are recommended for viscous or sticky applications. Periodic cleaning might be required
- For viscous or sticky applications, it is not recommended to use centering discs mounter along the probe
- Maximum error due to coating is 1 to 10% depending on probe type, dielectric constant, coating thickness, and coating height above product surface

Table A-6. Maximum Recommended Viscosity and Coating / Build-Up

	Coaxial	Twin lead	Single lead
Maximum viscosity	500 cP	1500 cP	8000 cP (1)(2)
Coating/build-up	Coating not recommended	Thin coating allowed, but no bridging	Coating allowed

(1) Consult your local Emerson Process Management representative in the case of agitation/turbulence and high viscous products.
(2) For viscous or sticky applications, it is not recommended to use centering discs mounted along the probe.

CE-mark

The 4–20 mA HART version (output option code H) complies with applicable directives (EMC and ATEX).

Based on the low emitted effects from the gauges (well below 0.1 mW) compared to limits given by the Rec. 1999/519/EC, no additional measures are needed.

A.3 Physical specification

A.3.1 Material selection

Emerson provides a variety of Rosemount product with various product options and configurations including materials of construction that can be expected to perform well in a wide range of applications. The Rosemount product information presented is intended as a guide for the purchaser to make an appropriate selection for the application. It is the purchaser's sole responsibility to make a careful analysis of all process parameters (such as all chemical components, temperature, pressure, flow rate, abrasives, contaminants, etc.), when specifying product, materials, options and components for the particular application. Emerson Process Management is not in a position to evaluate or guarantee the compatibility of the process fluid or other process parameters with the product, options, configuration or materials of construction selected.

A.3.2 Housing and enclosure

Type

Dual compartment (removable without opening the tank). Electronics and cabling are separated.

Two entries for conduit or cable connections. The transmitter housing can be rotated in any direction.

Electrical connection

½ - 14 NPT for cable glands or conduit entries.

Optional: M20 x 1.5 conduit/cable adapter or PG 13.5 conduit/cable adapter.

Recommended output cabling is twisted shielded pairs, 18-12 AWG.

Housing material

Polyurethane-covered aluminum or SST Grade CF8M (ASTM A743)

Ingress protection

NEMA 4X, IP 66, IP 67

Factory sealed

Yes

Weight

Transmitter head (TH): 5.5 lb (2.5 kg) in aluminum, 11 lb (5 kg) in SST

Remote housing mounting

Kit that includes a flexible armored extension cable and a bracket for wall or pipe mounting.

Figure A-15. Remote Housing Mounting

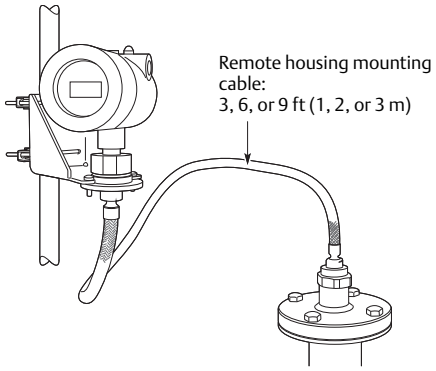

A.3.3 Tank connection and probe

Tank connection

The tank connection consists of a tank seal, a flange, Tri-Clamp, or NPT or BSP/G threads.

Certain models of flanged Alloy and PTFE-covered probes have a tank connection design with a protective flange plate of the same material as the probe and with a backing flange in 316 or 316L / EN 1.4404. The protective flange plate prevents the backing flange from being exposed to the tank atmosphere.

See "Dimensional drawings" on page 142.

Figure A-16. Tank Seal with Plate Design

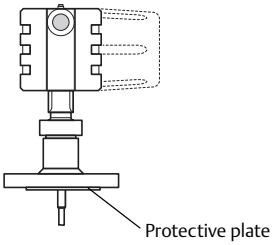

Flange dimensions

Follows ASME B 16.5, JIS B2220, and EN 1092-1 standards for blind flanges.

For Proprietary Fisher® and Masoneilan® flanges, see "Proprietary flanges" on page 151.

Vented flanges

Available with Masoneilan and Fisher vented flanges. Vented flanges must be ordered as accessories with a 1½-in. NPT threaded process connection (code RA); see "Ordering information" on page 152. As an alternative to a vented flange, it is possible to use a flushing connection ring on top of the standard nozzle.

Probe versions

Coaxial, rigid twin, rigid single and segmented rigid single lead, flexible twin and flexible single lead.

For guidelines on which probe to select depending on application, see the Guided Wave Radar Application Guidelines Technical Note (document number 00840-2600-4811).

For interface measurements the rigid single probe is the best choice for chamber mounting. The twin or coaxial probe is the preferred choice for clean, low dielectric constant liquids.

Material exposed to tank atmosphere

- Material model code 1: 316 or 316L SST (EN 1.4404), PTFE, PFA, and O-ring materials
- Material model code 2: Alloy C-276 (UNS N10276), PTFE, PFA, and O-ring materials
- Material model code 3: Alloy 400 (UNS N04400), PTFE, PFA, and O-ring materials
- Material model code 7: PTFE
- Material model code 8: PTFE, 316 or 316L SST (EN 1.4404), and O-ring materials

Pressure Equipment Directive (PED)

Complies with 97/23/EC article 3.3

Total probe length

This is defined from the upper reference point to the end of the probe (weight included, if applicable).

Figure A-17. Total Probe Length

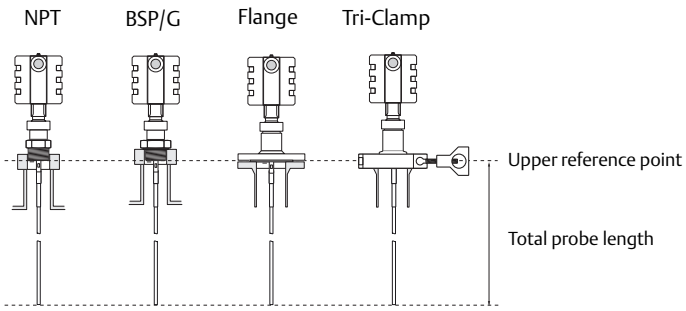

Select the probe length according to the required measuring range (the probe must be hung and fully extended through the entire distance where level readings are desired).

Cut-to-fit probes

Most of the probes can be cut in field. However, there are some restrictions for the standard coaxial probes: these can be cut up to 2 ft. (0.6 m). Probes shorter than 4.1 ft. (1.25 m) can be cut to the minimum length of 1.3 ft. (0.4 m). The PTFE covered probes cannot be cut in the field. For flexible twin lead probes, the minimum length is 3.3 ft. (1 m).

Minimum and maximum probe length

- Coaxial: 1.3 ft (0.4 m) to 19.7 ft (6 m)
- Rigid twin lead: 1.3 ft (0.4 m) to 9.8 ft (3 m)
- Flexible twin lead: 3.3 ft (1 m) to 77.1 ft (23.5 m)
- Rigid single lead (0.3 in./8 mm): 1.3 ft (0.4 m) to 9.8 ft (3 m)
- Rigid single lead (0.5 in./13 mm): 1.3 ft (0.4 m) to 19.7 ft (6.0 m)
- Segmented rigid single lead (0.5 in./13 mm): 1.3 ft (0.4 m) to 19.7 ft (6 m)
- Flexible single lead: 3.3 ft (1 m) to 77.1 ft (23.5 m)

Probe angle

0 to 90 degrees from vertical axis

Tensile strength

- Flexible single lead probe: 2698 lb (12 kN)
- Flexible twin lead probe: 2023 lb (9 kN)

Collapse load

Flexible single lead probe: 3597 lb (16 kN)

Sideway capacity

- Coaxial probe: 73.7 ft. lbf, 3.7 lb at 19.7 ft. (100 Nm, 1.67 kg at 6 m)
- Rigid twin lead: 2.2 ft. lbf, 0.22 lb at 9.8 ft. (3 Nm, 0.1 kg at 3 m)
- Rigid single lead / segmented rigid single lead: 4.4 ft. lbf, 0.44 lb at 9.8 ft. (6 Nm, 0.2 kg at 3 m)

Maximum recommended nozzle height

4 in. (10 cm) + nozzle diameter

For coaxial probes, there are no restrictions.

Minimum clearance

See Table A-7 on page 140.

Figure A-18. Minimum Clearance

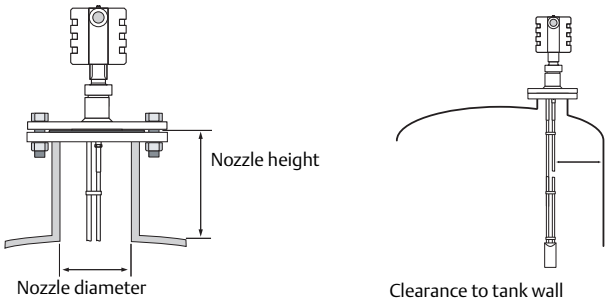

Other mechanical considerations

To get the best possible performance, the following must be considered before installing the transmitter:

- Inlets should be kept at a distance in order to avoid product filling on the probe
- Avoid physical contact between probes and agitators, as well as applications with strong fluid movement unless the probe is anchored
- Probe tie-down is recommended if the probe can move to within 1 ft. (30 cm) of any object during operations
- In order to stabilize the probe for side forces, it is possible to fix or guide the probe to the tank bottom
- For optimal single lead probe performance in non-metallic vessels, the probe must either be mounted with a 2-in. / DN 50 or larger metallic flange, or a metal sheet with a 14-in. diameter (350 mm) or larger must be used (see the reference manual for placement)

Figure A-19. Flexible Single Lead Probe with Chuck

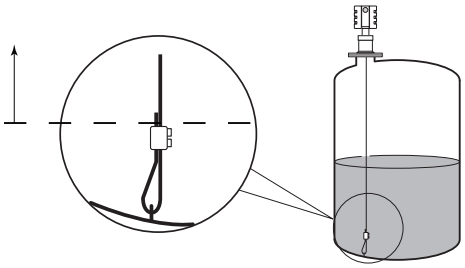

See “Using a segmented probe” on page 36 for more anchoring options.

See “Mechanical installation” on page 29 for further information.

Weight

- Flange: depends on flange size
- Coaxial probe: 0.67 lb/ft. (1 kg/m)
- Rigid single lead probe (0.3 in./8 mm): 0.27 lb/ft. (0.4 kg/m)
- Rigid single lead probe (0.5 in./13 mm): 0.71 lb/ft. (1.06 kg/m)
- Segmented Rigid Single Lead probe (0.5 in./13 mm): 0.71 lb/ft (1.06 kg/m)
- Rigid twin lead probe: 0.40 lb/ft. (0.6 kg/m)
- Flexible single lead probe: 0.05 lb/ft. (0.07 kg/m)
- Flexible twin lead probe: 0.09 lb/ft. (0.14 kg/m)
- End weight: 0.88 lb (0.40 kg) for single probes, 1.3 lb (0.60 kg) for twin probes

Engineered solutions

When standard model codes are not sufficient to fulfil requirements, please consult the factory to explore possible Engineered Solutions. This is typically, but not exclusively, related to the choice of wetted materials or the design of a process connection. These Engineered Solutions are part of the expanded offerings and may be subject to additional delivery lead time. For ordering, factory will supply a special R-labeled numeric option code that should be added at the end of the standard model string. See example model string below.

Example Model String: 3301-H-A-1-S-1-V-5A-E-33-00-RC-I5-M1W3C1-**R1234**

A.3.4 Chamber / pipe installations

Rosemount 9901 chamber

Rosemount 9901 allows external mounting of process level instrumentation. It supports a variety of process connections, and optional drain and vent connections. The Rosemount 9901 chamber is designed to the ASME B31.3 standard, and is Pressure Equipment Directive (PED) compliant. Use option code XC to order together with the 3300 Series transmitters.

The probe length to use for a Rosemount 9901 chamber can be calculated with this formula:

Side-and-side dimension:
Probe length = centre-to-centre dimension + 19 in. (48 cm)

Side-and-bottom dimension:
Probe length = centre-to-centre dimension + 4 in. (10 cm)

Use a centering disc the same diameter as the chamber if the probe length > 3.3 ft. (1 m). See Probe type in chamber considerations and Centering discs on page 139 for which probe and disc to use.

Figure A-20. Rosemount 9901 Chamber Insallation

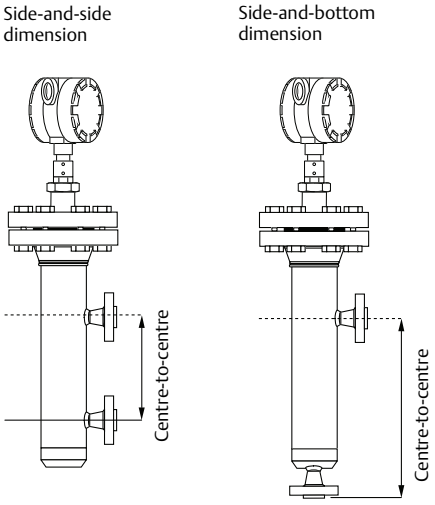

For additional information, see the Rosemount 9901 Chamber for Process Level Instrumentation Product Data Sheet (document number 00813-0100-4601).

Existing chamber

A Rosemount 3300 Series Transmitter is the perfect replacement in an existing displacer chamber.

Proprietary flanges are offered, enabling use of existing chambers to make installation easy.

Considerations when changing to the Rosemount 3300 Series:

- The Rosemount 3300 Series flange choice and probe length must be correctly matched to the chamber. Both standard ANSI and EN (DIN), as well as proprietary chamber flanges, are available. See "Proprietary flanges" on page 151 to identify the proprietary flanges.
- See Probe type in chamber considerations and Centering discs on page 139 for which probe and disc to use. See Table A-8 on page 140 for guidelines on the required probe length.

Figure A-21. Existing Chamber

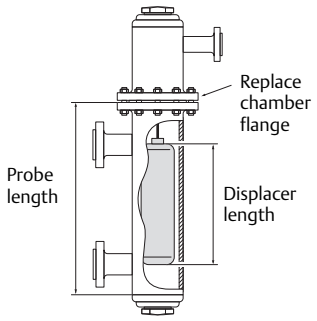

For additional information, see the Replacing Displacers with Guided Wave Radar Technical Note (document number 00840-2200-4811).

Probe type in chamber considerations

When installing a Rosemount 3300 Series in a chamber, the single lead probe is recommended.

The recommended minimum chamber diameter is 4 in. (100 mm) for single flexible probes and 3 in. (75 mm) for the single rigid probe. The probe should be centered to prevent it touching the sides of the well.

The probe length determines if a single rigid or single flexible probe should be used:

- Less than 19.7 ft. (6.0 m): Rigid single probe is recommended. Use a centering disc for probes longer than 3.3 ft. (1 m). If the installation requires less head-space, use a flexible single probe with a weight and centering disc.
- More than 19.7 ft. (6.0 m): Use flexible single probe with a weight and centering disc.

A short weight is available for the single flexible SST probe. It is used for measuring close to the probe end and shall be used where the measuring range must be maximized. The height is 2 in. (50 mm) and the diameter is 1.5 in. (37.5 mm). The option code is W2.

If a heavier weight is needed, option code W3 can be used (height is 5.5 in. (140 mm) and the diameter is 1.5 in. (37.5 mm).

Centering discs

To prevent the probe from contacting the chamber or pipe wall, centering discs are available for rigid single, flexible single, and flexible twin lead probes. The disc is attached to the end of the probe. Discs are made of stainless steel, Alloy C-276, Alloy 400, or PTFE.

When mounting a centering disc, it is important that it fits correctly in the chamber/pipe. See Table A-9 on page 140 for Dimension D.

Figure A-22. Centering Disc

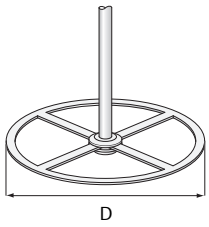

Table A-10 on page 141 shows which centering disc diameter to select for a particular pipe.

Table A-7. Minimum Clearance

	Coaxial	Rigid twin lead	Flexible twin lead	Rigid single lead / segmented rigid single lead	Flexible single lead
Recommended nozzle diameter	Enough space to fit the probe(1)	4 in. (10 cm) or more	4 in. (10 cm) or more	6 in. (15 cm) or more	6 in. (15 cm) or more
Min. nozzle diameter(2)	Enough space to fit the probe(1)	2 in. (5 cm)	2 in. (5 cm)	2 in. (5 cm)	2 in. (5 cm)
Min. clearance to tank wall or obstruction(3)	0 in. (0 cm)	4 in. (10 cm)	4 in. (10 cm)	4 in. (10 cm) if smooth metallic wall. 12 in. (30 cm) if disturbing objects, rugged metallic or concrete/plastic wall.	4 in. (10 cm) if smooth metallic wall. 12 in. (30 cm) if disturbing objects, rugged metallic or concrete/plastic wall.
Min. pipe / bypass diameter	1.5 in. (3.8 cm)	2 in. (5 cm)(4)	Consult your local Emerson Process Management representative.	2 in. (5 cm) (5)	Consult your local Emerson Process Management representative.

(1) Probe diameter is 1.1 in. (28 mm) for standard probes.
(2) Requires special configuration and setting of UNZ.
(3) The minimum clearance from tank bottom for the coaxial and rigid single probes is 0.2 in. (5 mm).
(4) The center-most lead must be at least 0.6 in. (15 mm) away from the pipe/bypass wall.
(5) The probe must be centered in the pipe/bypass.

Table A-8. Required Probe Length in Chambers

Chamber manufacturer	Probe length(1)
Major torque-tube manufacture (249B, 249C, 2449K, 249N, 259B)	Displacer + 9 in. (229 mm)
Masoneilan (Torque tube operated), proprietary flange	Displacer + 8 in. (203 mm)
Other - torque tube(2)	Displacer + 8 in. (203 mm)
Magnetrol (spring operated)(3)	Displacer + between 7.8 in. (195 mm) and 15 in. (383 mm)
Others - spring operated(2)	Displacer+19.7 in. (500 mm)

(1) If flushing ring is used, add the ring height to the probe length.
(2) For other manufacturers, there are small variations. This is an approximate value, actual length should be verified.
(3) Lengths vary depending on model, SG and rating, and should be verified.

Table A-9. Centering disc dimensions

Disc size	Actual disc diameter
2 in.	1.8 in. (45 mm)
3 in.	2.7 in. (68 mm)
4 in.	3.6 in. (92 mm)
6 in.	5.55 in. (141 mm)
8 in.	7.40 in. (188 mm)

Table A-10. Centering disc size recommendation for different pipe schedules

	Pipe schedule					
Pipe size	**5s, 5**	**10s,10**	**40s, 40**	**80s, 80**	**120**	**160**
2 in.	2 in.	2 in.	2 in.	2 in.	NA(1)	NA(2)
3 in.	3 in.	3 in.	3 in.	3 in.	NA(1)	2 in.
4 in.	4 in.	4 in.	4 in.	4 in.	4 in.	3 in.
5 in.	4 in.	4 in.	4 in.	4 in.	4 in.	4 in.
6 in.	6 in.	6 in.	6 in.	6 in.	4 in.	4 in.
7 in.	NA(1)	NA(1)	6 in.	6 in.	NA(1)	NA(1)
8 in.	8 in.	8 in.	8 in.	8 in.	6 in.	6 in.

(1) Schedule is not available for pipe size.
(2) No centering disc is available.

A.4 Dimensional drawings

Figure A-23. Rigid Single Lead Probe (Model Code 4A-4B)

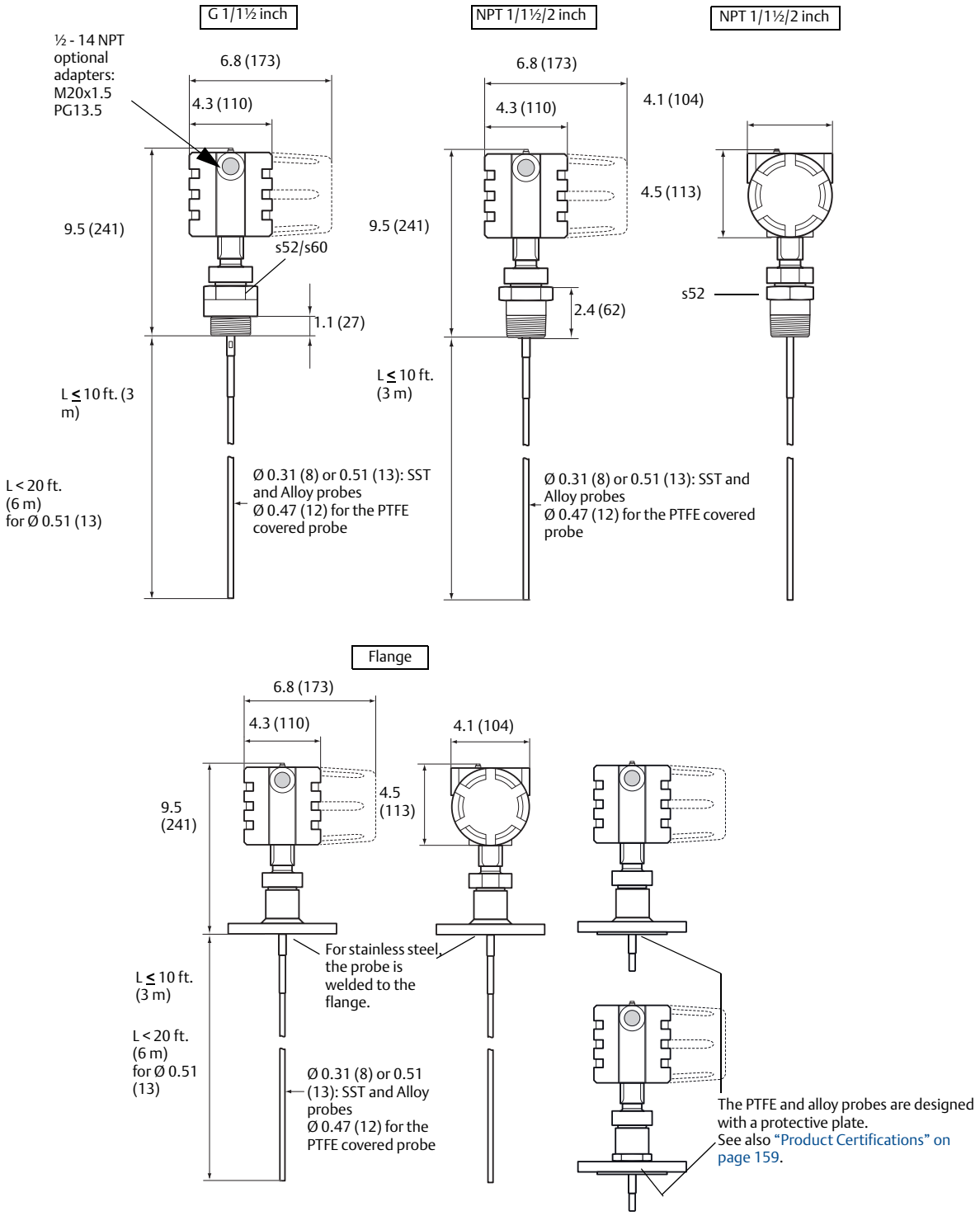

Dimensions are in inches (millimeters).

Figure A-24. Segmented Rigid Single Lead with Threaded Connection (Model Code 4S)

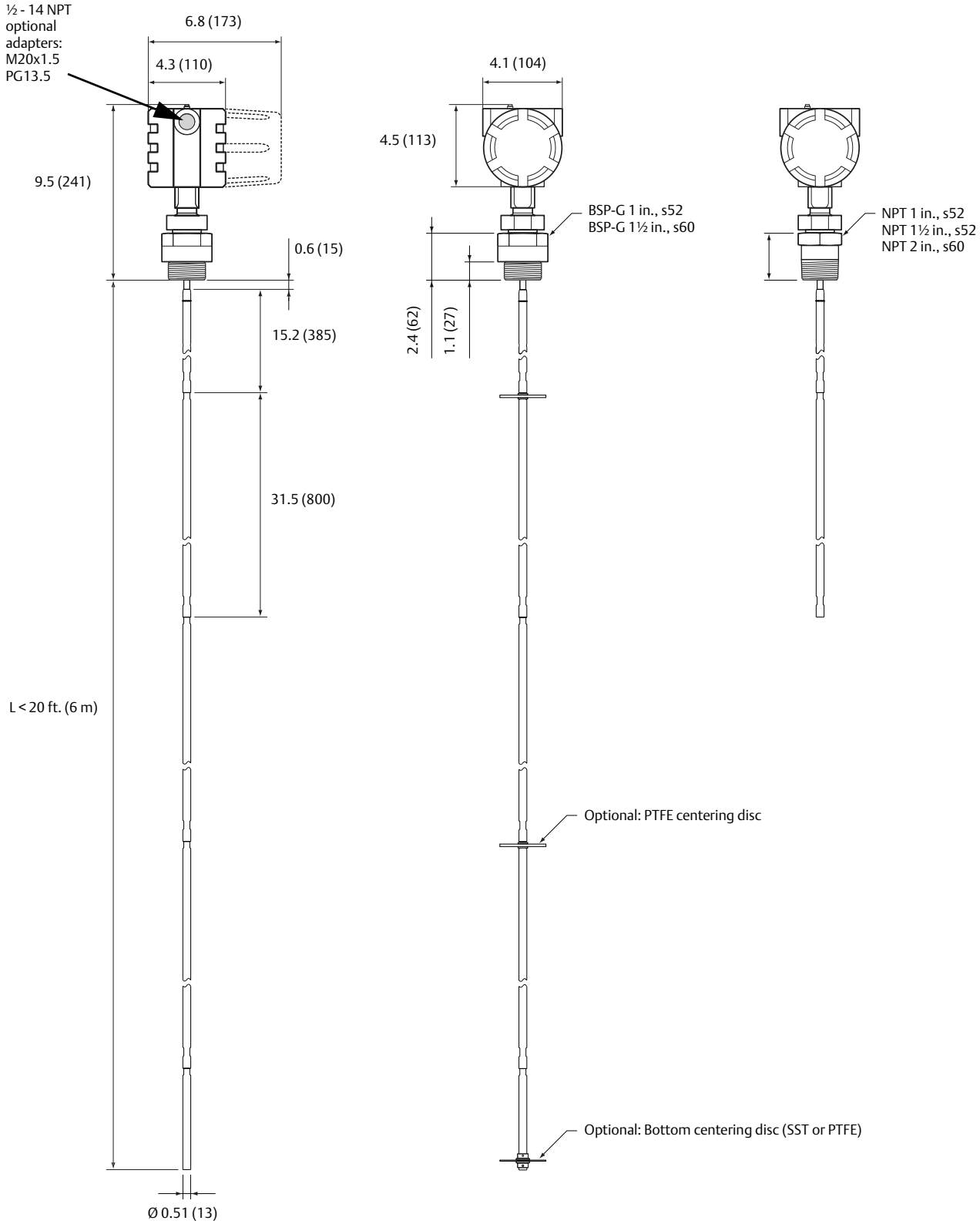

Dimensions are in inches (millimeters).

Figure A-25. Segmented Rigid Single Lead with Flange Connection (Model Code 4S)

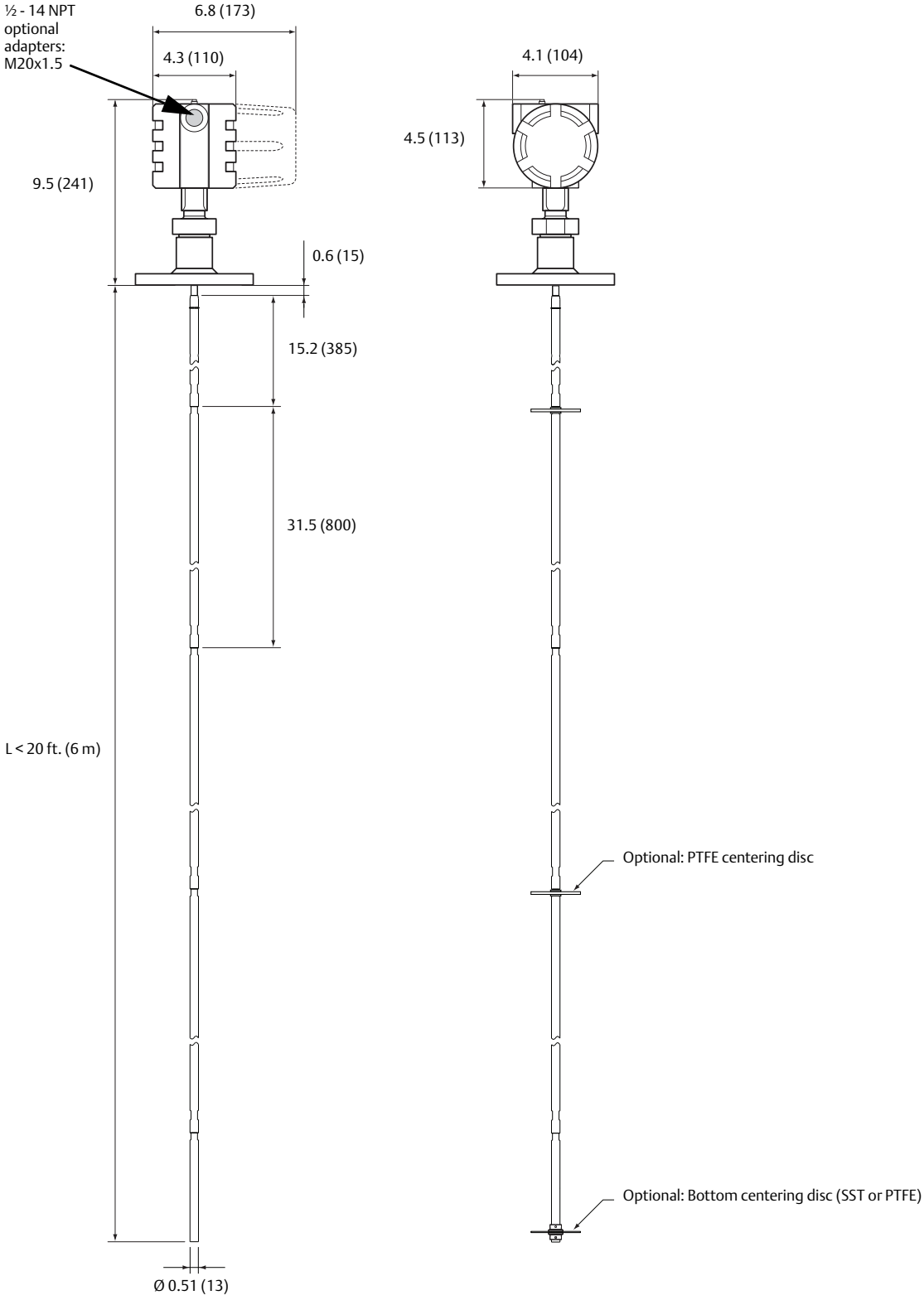

Dimensions are in inches (millimeters).

Figure A-26. Flexible Single Lead Probe (Model Code 5A-5B)

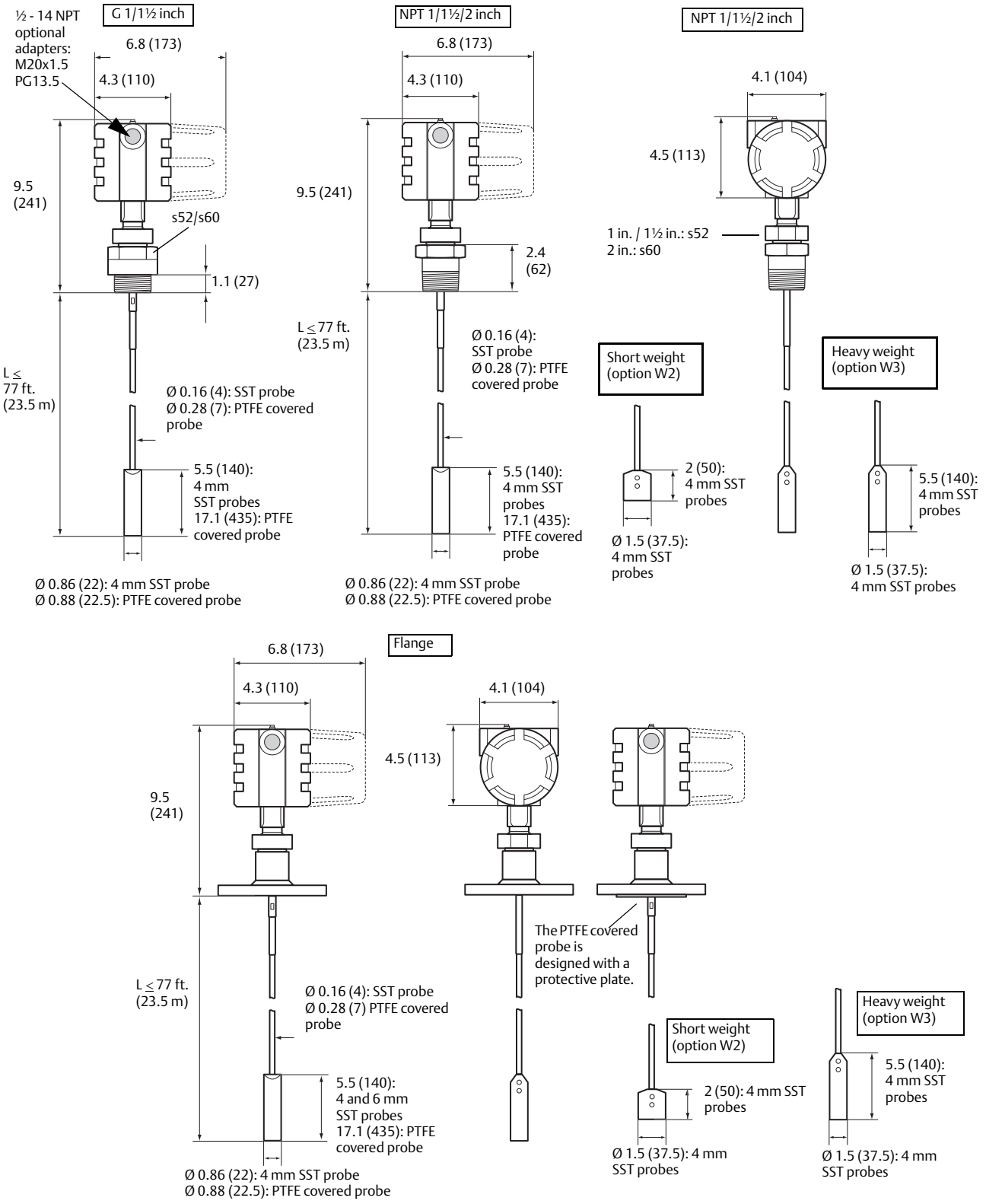

Dimensions are in inches (millimeters).

Figure A-27. Coaxial Probe (Model Code 3A-3B)

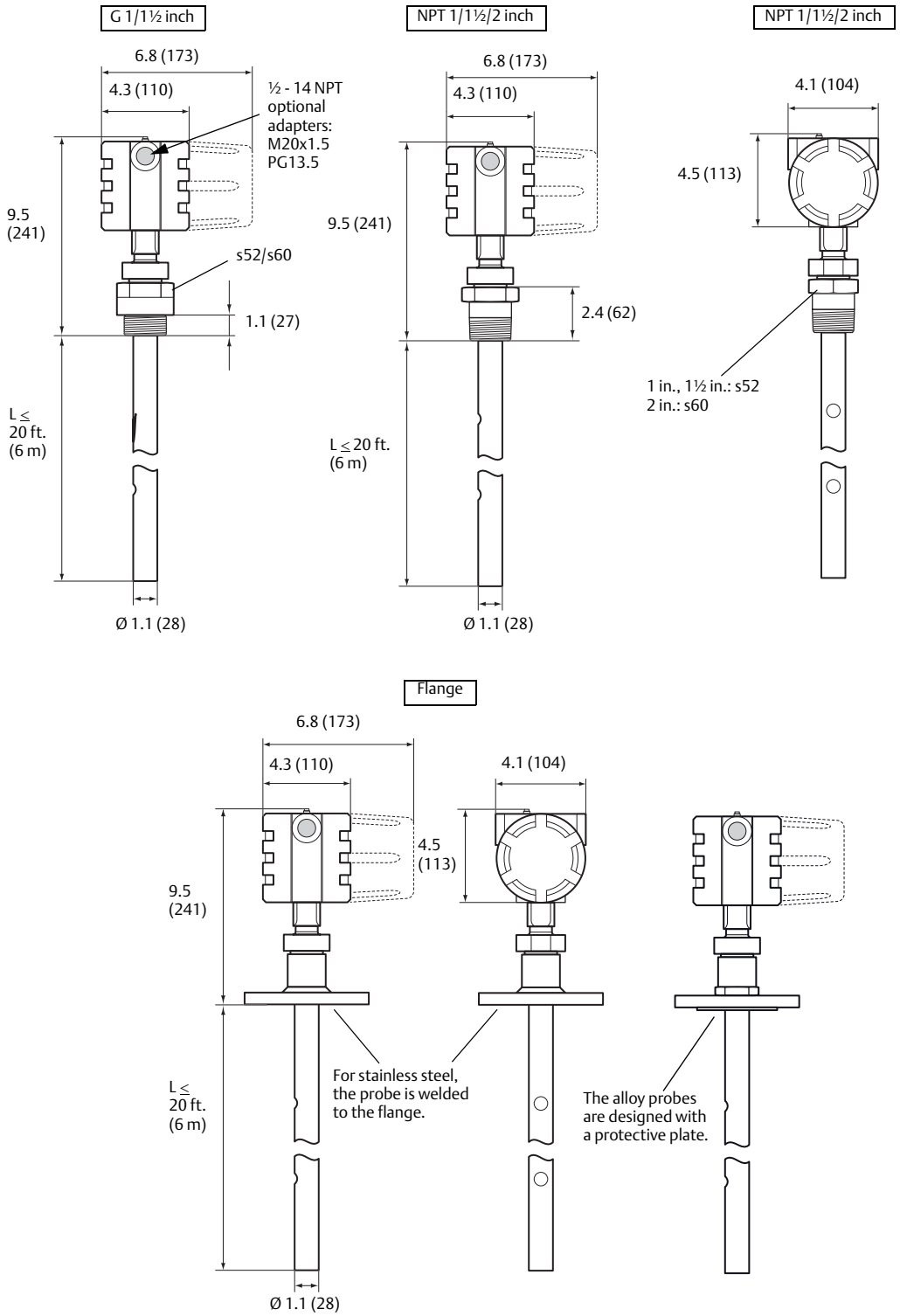

Dimensions are in inches (millimeters).

Figure A-28. Rigid Twin Lead Probe (Model Code 1A)

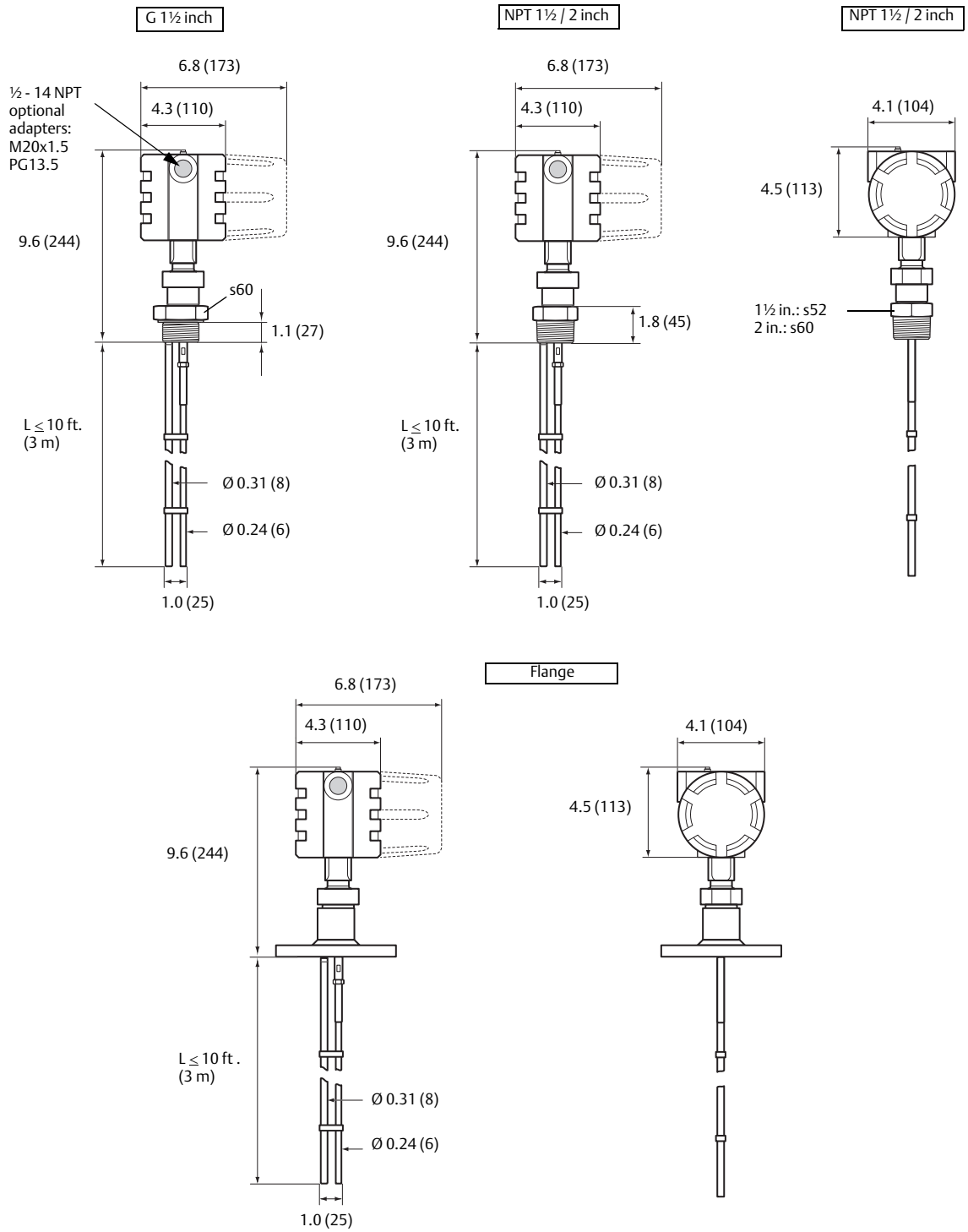

Dimensions are in inches (millimeters).

Figure A-29. Flexible Twin Lead Probe with Weight (Model Code 2A)

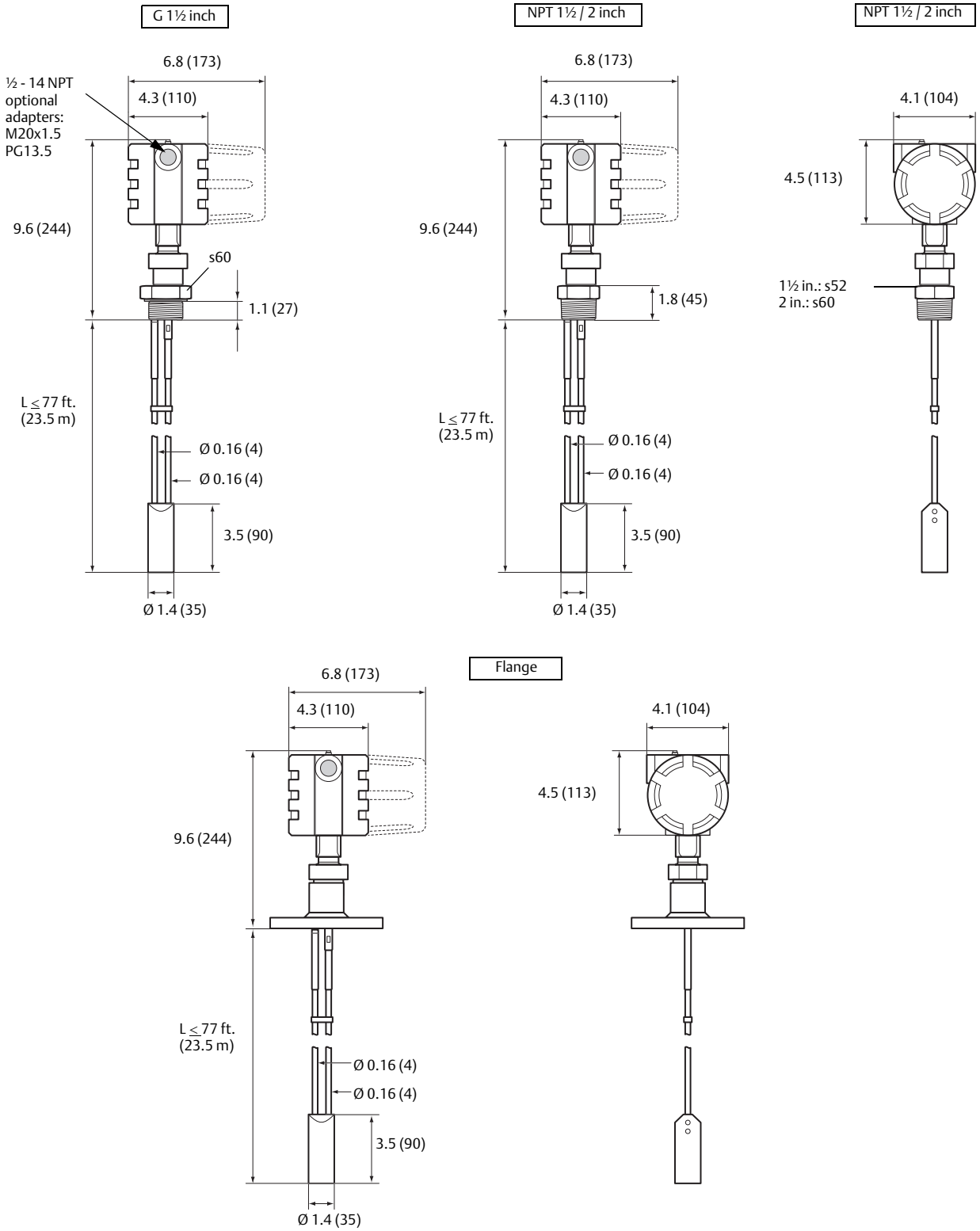

Dimensions are in inches (millimeters).

Figure A-30. Bracket Mounting

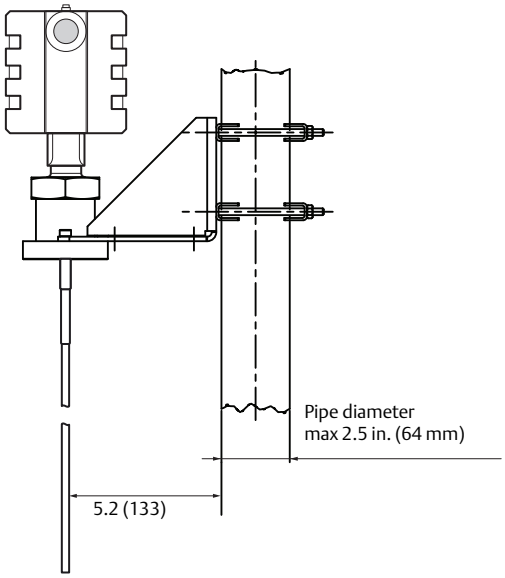

Pipe mounting
(vertical pipe)

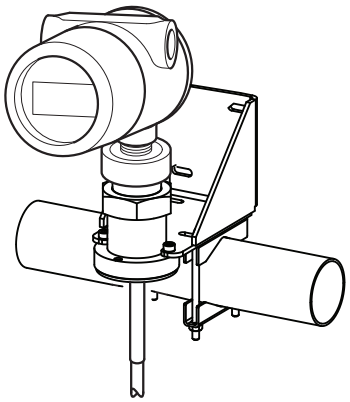

Pipe mounting
(horizontal pipe)

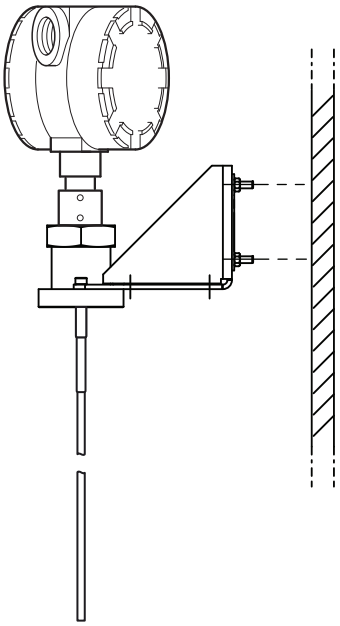

Wall mounting

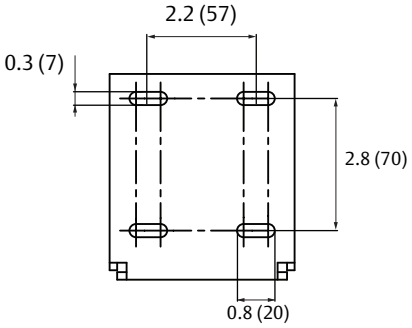

Hole pattern
wall mounting

Dimensions are in inches (millimeters).

Figure A-31. Remote Housing

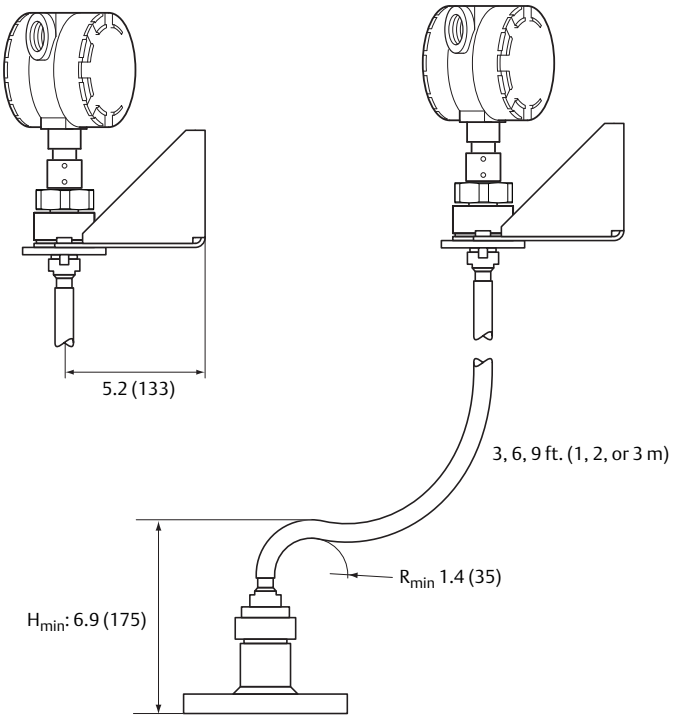

Dimensions are in inches (millimeters).

A.5 Proprietary flanges

Raised face

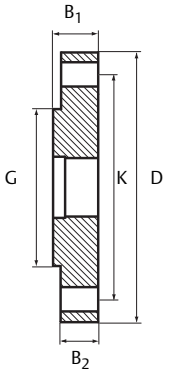

Recessed face

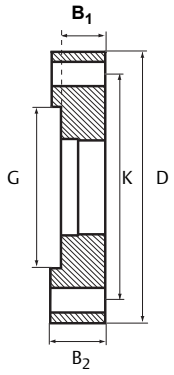

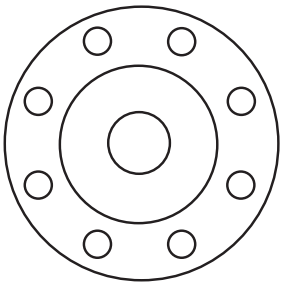

Dimensions are in inches (millimeters).

D: Outside diameter

B1: Flange thickness with gasket surface

B2: Flange thickness without gasket surface

$F=B_1-B_2$: Gasket surface thickness

G: Gasket surface diameter

Bolts: Number of bolts

K: Bolt hole circle diameter

Note

Dimensions may be used to aid in the identification of installed flanges. It is not intended for manufacturing use.

Table A-11. Dimensions of Proprietary Flanges

Special flanges[1]	D	B_1	B_2	F	G	# Bolts	K
Fisher 249B/259B[2][3]	9.00 (228.6)	1.50 (38.2)	1.25 (31.8)	0.25 (6.4)	5.23 (132.8)	8	7.25 (184.2)
Fisher 249C[4]	5.69 (144.5)	0.94 (23.8)	1.13 (28.6)	-0.19 (-4.8)	3.37 (85.7)	8	4.75 (120.65)
Masoneilan[2]	7.51 (191.0)	1.54 (39.0)	1.30 (33.0)	0.24 (6.0)	4.02 (102.0)	8	5.87 (149.0)

(1) These flanges are also available in a vented version.
(2) Flange with raised face.
(3) Fisher 249B and 259B flanges can be replaced by Fisher - proprietary 316L SST (for 249B cages) torque tube flanges (model code TF).
(4) Flange with recessed face.

A.6 Ordering information

Table A-12. Rosemount 3301 and 3302 level and/or interface in liquids ordering information

The starred options (★) represent the most common options and should be selected for best delivery. The non-starred offerings are subject to additional delivery lead time.

Model	Product description			
3301	Guided Wave Radar level transmitter (interface available for fully submerged probe)			★
3302	Guided Wave Radar level and interface transmitter			★
Signal output				
H	4-20 mA with HART® communication			★
M[(1)]	RS-485 with Modbus communication			★
Housing material				
A	Polyurethane-covered aluminum			★
S	Stainless steel, grade CF8M (ASTM A743)			
Conduit / cable threads				
1	½–14 NPT			★
2	M20 x 1.5 adapter			★
Operating temperature and pressure[(2)]			**Probe type**	
S	- 15 psig (-1bar) to 580 psig (40 bar) @ 302 °F (150 °C)		3301: All 3302: 1A, 2A, 3B, 4A, 4B, 4S	★
Material of construction[(3)]: process connection / probe		**Probe type**		
1	316L SST (EN 1.4404)	3301: All 3302: 1A, 2A, 3B, 4A, 4B, 4S		★
2	Alloy C-276 (UNS N10276). With plate design if flanged version.	3301: 3A, 3B, 4A 3302: 3B, 4A		
3	Alloy 400 (UNS N04400). With plate design if flanged version.	3301: 3A, 3B, 4A, 5A, 5B 3302: 3B, 4A		
7	PTFE-covered probe and flange. With plate design.	3301: 4A, 5A, Flanged version 3302: 4A, Flanged version		
8	PTFE-covered probe	3301: 4A, 5A 3302: 4A		
Sealing, O-ring material (consult factory for other O-ring materials)				
V	Viton Fluoroelastomer			★
E	Ethylene Propylene			★
K	Kalrez 6375 Perfluoroelastomer			★
B	Nitrile Butadiene (NBR)			★
Probe type, model 3301		**Process connection**	**Probe lengths**	
3B	Coaxial, perforated. For level and interface measurement.	Flange / 1-in., 1 1/2-in., 2-in. thread	Min.: 1 ft. 4 in. (0.4 m) Max: 19 ft. 8 in. (6 m)	★
4B[(4)]	Rigid single lead 0.5 in. (13 mm)	Flange / 1-in., 1 1/2-in., 2- in. thread / Tri-Clamp	Min.: 1 ft. 4 in. (0.4 m) Max: 19 ft. 8 in. (6.0 m)	★
5A	Flexible single lead with weight	Flange / 1-in., 1 1/2-in., 2-in. thread / Tri-Clamp	Min.: 3 ft. 4 in. (1 m) Max: 77 ft. (23.5 m)	★
1A	Rigid twin lead	Flange / 1 1/2-in., 2-in. thread	Min.: 1 ft. 4 in. (0.4 m) Max: 9 ft. 10 in. (3 m)	
2A	Flexible twin lead with weight	Flange / 1 1/2-in., 2-in. thread	Min.: 3 ft. 4 in. (1 m) Max: 77 ft. (23.5 m)	

3A	Coaxial (for level measurement)	Flange / 1-in., 1 1/2-in., 2-in. thread	Min.: 1 ft. 4 in. (0.4 m) Max: 19 ft. 8 in. (6 m)	
4A	Rigid single lead 0.3 in. (8 mm)	Flange / 1-in., 1 1/2-in., 2-in. thread / Tri-Clamp	Min.: 1 ft. 4 in. (0.4 m) Max: 9 ft. 10 in. (3 m)	
4S	Segmented rigid single lead 0.5 in. (13 mm)	Flange / 1-in., 1 1/2-in., 2-in. thread / Tri-Clamp	Min.: 1 ft. 4 in. (0.4 m) Max: 19 ft. 8 in. (6 m)	
5B	Flexible single lead with chuck	Flange / 1-in., 1 1/2-in., 2-in. thread / Tri-Clamp	Min.: 3 ft. 4 in. (1 m) Max: 77 ft. (23.5 m)	
Probe type, model 3302		**Process connection**	**Probe lengths**	
3B	Coaxial, perforated. For level and interface measurement.	Flange / 1-in., 1 1/2-in., 2-in. thread	Min.: 1 ft. 4 in. (0.4 m) Max: 19 ft. 8 in. (6 m)	★
4B[4]	Rigid single lead 0.5 in. (13 mm)	Flange / 1-in., 1 1/2-in., 2-in. thread / Tri-Clamp	Min.: 1 ft. 4 in. (0.4 m) Max: 19 ft. 8 in. (6.0 m)	★
1A	Rigid twin lead	Flange / 1 1/2-in., 2-in. thread	Min.: 1 ft. 4 in. (0.4 m) Max: 9 ft. 10 in. (3 m)	
2A	Flexible twin lead with weight	Flange / 1 1/2-in., 2-in. thread	Min.: 3 ft. 4 in. (1 m) Max: 77 ft. (23.5 m)	
4A	Rigid single lead 0.3 in. (8 mm)	Flange / 1-in., 1 1/2-in., 2-in. thread / Tri-Clamp	Min.: 1 ft. 4 in. (0.4 m) Max: 9 ft. 10 in. (3 m)	
4S	Segmented rigid single lead 0.5 in. (13 mm)	Flange / 1-in., 1 1/2-in., 2-in. thread / Tri-Clamp	Min.: 1 ft. 4 in. (0.4 m) Max: 19 ft. 8 in. (6 m)	
Probe length units				
E	English (feet, inch)			★
M	Metric (meters, centimeters)			★
Total probe length [5] (feet/m)				
xx	0 - 77 ft. or 0-23 m			★
Total probe length [5] (inch/cm)				
xx	0 - 11 in. or 0-99 cm			★
Process connection - size / type (consult factory for other process connections)				
ASME / ANSI flanges[6][7]				
AA	2 in., 150 lb			★
AB	2 in., 300 lb			★
BA	3 in., 150 lb			★
BB	3 in., 300 lb			★
CA	4 in., 150 lb			★
CB	4 in., 300 lb			★
DA	6 in., 150 lb			
EN (DIN) flanges[6][7]				
HB	DN50, PN40			★
IA	DN80, PN16			★
IB	DN80, PN40			★
JA	DN100, PN16			★
JB	DN100, PN40			★
KA	DN150, PN16			
JIS flanges[6][7]				
UA	50A, 10K			★
VA	80A, 10K			★
XA	100A, 10K			★

UB	50A, 20K		
VB	80A, 20K		
XB	100A, 20K		
YA	150A, 10K		
YB	150A, 20K		
ZA	200A, 10K		
ZB	200A, 20K		
Threaded connections[6]		**Probe type**	
RA	1½-in. NPT thread	3301: All 3302: 1A, 2A, 3B, 4A, 4B, and 4S	★
RC	2-in. NPT thread	3301: 1A, 2A, 3A, 3B, 4A, 4B, 4S, 5A, 5B 3302: 1A, 2A, 3B, 4A, 4B, and 4S	★
RB	1-in. NPT thread	3301: 3A, 3B, 4A, 4B, 4S, 5A, 5B 3302: 3B, 4A, 4B, and 4S	
SA	1½-in. BSP (G 1½ in.) thread	3301: All 3302: 1A, 2A, 3B, 4A, 4B, and 4S	
SB	1-in. BSP (G 1-in.) thread	3301: 3A, 3B, 4A, 4B, 4S, 5A, 5B 3302: 3B, 4A, 4B, and 4S	
Tri-Clamp fittings[6]		**Probe type**	
FT	1½-in. Tri-Clamp	3301: 4A, 4B, 4S, 5A, 5B 3302: 4A, 4B, and 4S	
AT	2-in. Tri-Clamp	3301: 4A, 4B, 4S, 5A, 5B 3302: 4A, 4B, and 4S	
BT	3-in. Tri-Clamp	3301: 4A, 4B, 4S, 5A, 5B 3302: 4A, 4B, and 4S	
CT	4-in. Tri-Clamp	3301: 4A, 4B, 4S, 5A, 5B 3302: 4A, 4B, and 4S	
Proprietary flanges[8]			
TF	Fisher - proprietary 316L SST (for 249B, 259B cages) torque tube flange		★
TT	Fisher - proprietary 316L SST (for 249C cages) torque tube flange		★
TM	Masoneilan - proprietary 316L SST torque tube flange		★
Hazardous locations certifications			
NA	No hazardous locations certifications		★
E1[9]	ATEX flameproof		★
E3[9]	NEPSI flameproof		★
E4[9]	TIIS flameproof		★
E5[9]	FM explosion-proof		★
E6[9]	CSA explosion-proof		★
E7[9]	IECEx flameproof		★
I1	ATEX intrinsic safety		★
I3	NEPSI intrinsic safety		★
I5	FM intrinsic safety and non-incendive		★
I6	CSA intrinsic safety and non-incendive		★
I7	IECEx intrinsic safety		★
EM	Technical Regulations Customs Union (EAC) Flameproof (consult factory for details)		

IM	Technical Regulations Customs Union (EAC) Intrinsic Safety (consult factory for details)		
KA[9]	ATEX and CSA flameproof/explosion-proof		
KB[9]	FM and CSA explosion-proof		
KC[9]	ATEX and FM flameproof/explosion-proof		
KD	ATEX and CSA intrinsic safety		
KE	FM and CSA intrinsic safety		
KF	ATEX and FM intrinsic safety		
Options			
Display			
M1	Integral digital display		★
Hydrostatic testing			
P1[10]	Hydrostatic testing		★
Materials certification			
N2	NACE material recommendation per MR-0175[11], MR-0103		★
Installation options			
LS	Long stud[12] 9.8 in. (250 mm) for flexible single lead probe to prevent contact with wall/nozzle. Standard height is 3.9 in. (100 mm).		★
BR	Mounting bracket for 1½-in. NPT process connection (RA)		
Weight options for flexible single lead probe (5A)			
W3	Heavy weight (recommended choice for most applications) Weight = 2.43 lb (1.1 kg), Length = 5.5 in. (140 mm), Diameter = 1.5 in. (37.5 mm)		★
W2	Short weight (when measuring close to the probe end)[13] Weight = 0.88 lb (0.4 kg), Length = 2 in. (50 mm), Diameter = 1.5 in. (37.5 mm)		
Sx and Px - centering discs		**Outer diameter**	
S2[14]	2-in. centering disc	1.8 in. (45 mm)	★
S3[14]	3-in. centering disc	2.7 in. (68 mm)	★
S4[14]	4-in. centering disc	3.6 in. (92 mm)	★
P2[15]	2-in. centering disc PTFE	1.8 in. (45 mm)	★
P3[15]	3-in. centering disc PTFE	2.7 in. (68 mm)	★
P4[15]	4-in. centering disc PTFE	3.6 in. (92 mm)	★
S6[14]	6-in. centering disc	5.55 in. (141 mm)	
S8[14]	8-in. centering disc	7.40 in. (188 mm)	
P6[15]	6-in. centering disc PTFE	5.55 in. (141 mm)	
P8[15]	8-in. centering disc PTFE	7.40 in. (188 mm)	
Remote housing[16]			
B1	1 m / 3.2 ft. remote housing mounting cable and bracket		
B2	2 m / 6.5 ft. remote housing mounting cable and bracket		
B3	3 m / 9.8 ft. remote housing mounting cable and bracket		

Cx - special configuration (software)		
C1	Factory configuration (Configuration Data Sheet required with order, available at www.rosemount.com)	★
C4	Namur alarm and saturation levels, high alarm	★
C5	Namur alarm and saturation levels, low alarm	★
C8(17)	Low alarm (standard Rosemount alarm and saturation levels)	★
Qx - special certifications		
Q4	Calibration Data Certification	★
Q8(18)	Material Traceability Certification per EN 10204 3.1	★
U1	WHG Overfill Approval. Only available with HART 4-20 mA output (Output Option Code H)	★
QG	GOST Primary Verification Certificate	
Consolidate to chamber(19)		
XC	Consolidate to chamber	
Engineered solutions		
Rxxx	Engineered Solutions beyond standard model codes (consult factory for details)	

(1) Requires external 8-30 Vdc power supply.
(2) Process seal rating. Final rating depends on flange and O-ring selection.
(3) For other materials, consult the factory.
(4) Available in SST. Consult the factory for other materials.
(5) Probe weight included if applicable. Give the total probe length in feet and inches or meters and centimeters, depending on selected probe length unit. If tank height is unknown, please round up to an even length when ordering. Probes can be cut to exact length in field. Maximum allowable length is determined by process conditions.
(6) Available in material 316L and EN 1.4404. For other materials consult the factory.
(7) ASME/ANSI: Raised face type for SST flanges. EN: Type A flat face for SST flanges. JIS: Raised face type for SST flanges.
(8) Available in material 316L. For pressure and temperature rating, see page 124.
(9) Probes are intrinsically safe.
(10) Available for flanged connection.
(11) 3301: valid for probe type 3A, 3B, 4A, 4B, and 4S. 3302: valid for probe type 3B, 4A, 4B, and 4S.
(12) Not available with PTFE covered probes.
(13) Only for Material of Construction code 1 and Probe Type 5A.
(14) Material in accordance with selected material of construction for probe types 2A, 4A, 4B, 4S, and 5A.
(15) Available for SST, Alloy-C-276, and Alloy 400 probes, type 2A, 4A, 4B, 4S, and 5A.
(16) Requires software version 10 or higher.
(17) The standard alarm setting is high.
(18) Option available for pressure retaining wetted parts.
(19) Selecting the XC option code on the Rosemount 3300 Series Guided Wave Radar and the Rosemount 9901 Chamber will result in matching, consolidating, configuring, and shipping of the two products in one crate. Note that the flange bolts are only hand-tightened. Long rigid single lead probes (> 8 ft/2.5 m) are shipped separately in order to reduce transportation risk damage.

Table A-13. Rosemount 3301 and 3302 accessories

The starred options (★) represent the most common options and should be selected for best delivery. The non-starred offerings are subject to additional delivery lead time.

Centering discs[1][2]		**Outer diameter**	
03300-1655-0001	Kit, 2-in. centering disc, SST, rigid single	1.8 in. (45 mm)	★
03300-1655-0002	Kit, 3-in. centering disc, SST, rigid single	2.7 in. (68 mm)	★
03300-1655-0003	Kit, 4-in. centering disc, SST, rigid single	3.6 in. (92 mm)	★
03300-1655-0006	Kit, 2-in. centering disc, PTFE, rigid single	1.8 in. (45 mm)	★
03300-1655-0007	Kit, 3-in. centering disc, PTFE, rigid single	2.7 in. (68 mm)	★
03300-1655-0008	Kit, 4-in. centering disc, PTFE, rigid single	3.6 in. (92 mm)	★
03300-1655-1001	Kit, 2-in. centering disc, SST, single / twin flex lead	1.8 in. (45 mm)	★
03300-1655-1002	Kit, 3-in. centering disc, SST, single / twin flex lead	2.7 in. (68 mm)	★
03300-1655-1003	Kit, 4-in. centering disc, SST, single / twin flex lead	3.6 in. (92 mm)	★
03300-1655-1006	Kit, 2-in. centering disc, PTFE, single / twin flex lead	1.8 in. (45 mm)	★
03300-1655-1007	Kit, 3-in. centering disc, PTFE, single / twin flex lead	2.7 in. (68 mm)	★
03300-1655-1008	Kit, 4-in. centering disc, PTFE, single / twin flex lead	3.6 in. (92 mm)	★
03300-1655-0004	Kit, 6-in. centering disc, SST, rigid single	5.55 in. (141 mm)	
03300-1655-0005	Kit, 8-in. centering disc, SST, rigid single	7.40 in. (188 mm)	
03300-1655-0009	Kit, 6-in. centering disc, PTFE, rigid single	5.55 in. (141 mm)	
03300-1655-0010	Kit, 8-in. centering disc, PTFE, rigid single	7.40 in. (188 mm)	
03300-1655-1004	Kit, 6-in. centering disc, SST, single / twin flex lead	5.55 in. (141 mm)	
03300-1655-1005	Kit, 8-in. centering disc, SST, single / twin flex lead	7.40 in. (188 mm)	
03300-1655-1009	Kit, 6-in. centering disc, PTFE, single / twin flex lead	5.55 in. (141 mm)	
03300-1655-1010	Kit, 8-in. centering disc, PTFE, single / twin flex lead	7.40 in. (188 mm)	
Centering discs for mounting between segments (probe type 4S only)		**Outer diameter**	
03300-1656-1002	2-in. Centering disc (1 pc), PTFE, Segmented Rigid Single Lead	1.8 in. (45 mm)	
03300-1656-1003	3-in. Centering disc (1 pc), PTFE, Segmented Rigid Single Lead	2.7 in. (68 mm)	
03300-1656-1004	4-in. Centering disc (1 pc), PTFE, Segmented Rigid Single Lead	3.6 in. (92 mm)	
03300-1656-1006	6-in. Centering disc (1 pc), PTFE, Segmented Rigid Single Lead	5.55 in. (141 mm)	
03300-1656-1008	8-in. Centering disc (1 pc), PTFE, Segmented Rigid Single Lead	7.4 in. (188 mm)	
03300-1656-3002	2-in. Centering disc (3 pcs), PTFE, Segmented Rigid Single Lead	1.8 in. (45 mm)	
03300-1656-3003	3-in. Centering disc (3 pcs), PTFE, Segmented Rigid Single Lead	2.7 in. (68 mm)	
03300-1656-3004	4-in. Centering disc (3 pcs), PTFE, Segmented Rigid Single Lead	3.6 in. (92 mm)	
03300-1656-3006	6-in. Centering disc (3 pcs), PTFE, Segmented Rigid Single Lead	5.55 in. (141 mm)	
03300-1656-3008	8-in. Centering disc (3 pcs), PTFE, Segmented Rigid Single Lead	7.4 in. (188 mm)	
03300-1656-5002	2-in. Centering disc (5 pcs), PTFE, Segmented Rigid Single Lead	1.8 in. (45 mm)	
03300-1656-5003	3-in. Centering disc (5 pcs), PTFE, Segmented Rigid Single Lead	2.7 in. (68 mm)	
03300-1656-5004	4-in. Centering disc (5 pcs), PTFE, Segmented Rigid Single Lead	3.6 in. (92 mm)	
03300-1656-5006	6-in. Centering disc (5 pcs), PTFE, Segmented Rigid Single Lead	5.55 in. (141 mm)	
03300-1656-5008	8-in. Centering disc (5 pcs), PTFE, Segmented Rigid Single Lead	7.4 in. (188 mm)	
Segmented rigid single lead probe spare part kit			
03300-0050-0001	15.2 in. / 385 mm Segment for Top connection (1 pc)		
03300-0050-0002	31.5 in. / 800 mm Segment (1 pc)		
03300-0050-0003	31.5 in. / 800 mm Segment (3 pcs)		
03300-0050-0004	31.5 in. / 800 mm Segment (5 pcs)		
03300-0050-0005	31.5 in. / 800 mm Segment (12 pcs)		
Vented flanges[3]			
03300-1812-0091	Fisher 249B/259B[4]		
03300-1812-0092	Fisher 249C[4]		
03300-1812-0093	Masoneilan[4]		

HART modem and cables		
03300-7004-0001	MACTek Viator HART modem and cables (RS232 connection)	★
03300-7004-0002	MACTek Viator HART modem and cables (USB connection)	★

(1) If a centering disc is required for a flanged probe, the centering disc can be ordered with options Sx or Px, see page 155. If a centering disc is required for a threaded connection or as a spare part, it should be ordered using the item numbers listed below.
(2) To order a centering disc in a different material, consult the factory.
(3) 1½-in. NPT threaded connection (RA) is required.
(4) For pressure and temperature rating, see "Fisher & Masoneilan flange rating" on page 124.

Appendix B Product Certifications

Safety messages . . . . . page 159
EU Conformity . . . . . page 160
Hazardous locations certifications . . . . . page 161
Other certifications . . . . . page 172
Approval drawings . . . . . page 172

B.1 Safety messages

Procedures and instructions in this section may require special precautions to ensure the safety of the personnel performing the operations. Information that raises potential safety issues is indicated by a warning symbol (⚠). Please refer to the following safety messages before performing an operation preceded by this symbol.

⚠ WARNING

Explosions could result in death or serious injury.

- Verify that the operating environment of the gauge is consistent with the appropriate hazardous locations certifications.
- Before connecting a HART®-based communicator in an explosive atmosphere, make sure the instruments in the loop are installed in accordance with intrinsically safe or non-incendive field wiring practices.
- In an explosion-proof/flameproof installation, do not remove the transmitter cover when power is applied to the unit.

Failure to follow safe installation and servicing guidelines could result in death or serious injury.

- Make sure the transmitter is installed by qualified personnel and in accordance with applicable code of practice.
- Use the equipment only as specified in this manual. Failure to do so may impair the protection provided by the equipment.
- Do not perform any service other than those contained in this manual unless you are qualified.

⚠ CAUTION

A safety isolator such as a zener barrier is always needed for intrinsic safety.

⚠ WARNING

High voltage that may be present on leads could cause electrical shock.

- Avoid contact with leads and terminals.
- Make sure the main power to the radar transmitter is off and the lines to any other external power source are disconnected or not powered while wiring the transmitter.
- Probes covered with plastic and/or with plastic discs may generate an ignition-capable level of electrostatic charge under certain extreme conditions. Therefore, when the probe is used in a potentially explosive atmosphere, appropriate measures must be taken to prevent electrostatic discharge.
- Eliminate the risk of ESD discharge prior to dismounting the transmitter head.
- Probes may generate an ignition- capable level of electrostatic charge under extreme conditions. During any type of installation or maintenance in a potentially explosive atmosphere, the responsible person should make sure that any ESD risks are eliminated before attempting to separate the probe from the transmitter head.

B.2 EU Conformity

The most recent revision of the EC declaration of conformity can be found at www.rosemount.com.

B.3 Hazardous locations certifications

The Rosemount 3300 Series Guided Wave Radar level and interface transmitters that have the following labels attached have been certified to comply with the requirements of the approval agencies noted.

B.3.1 North American certifications

Factory Mutual (FM) approvals

Project ID: 3013394

Figure B-1. Approval Labels Factory Mutual (FM)

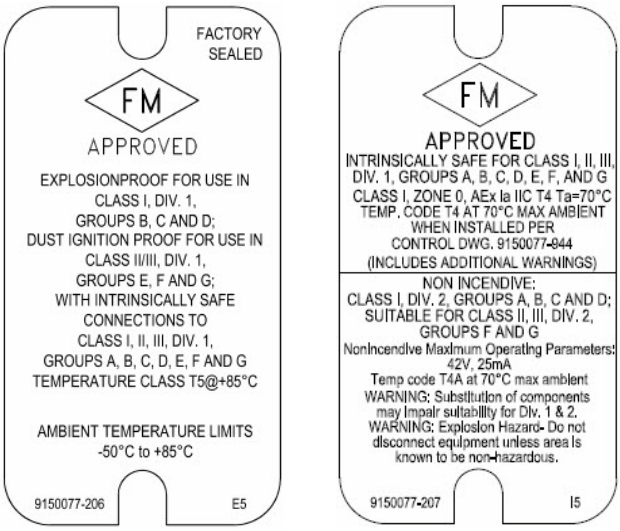

E5 Explosion-proof for Class I, Division 1, Groups B, C and D.

Dust-ignition proof for Class II/III, Division 1, Groups E, F, and G; with intrinsically safe connections to Class I, II, III, Div 1, Groups A, B, C, D, E, F, and G.

Temperature class T5 @+85 °C.

Ambient temperature limits: -50 °C to + 85 °C

Approval valid for HART and Modbus® options.

I5 Intrinsically safe for Class I, II, III, Division 1, Groups A, B, C, D, E, F, and G.

Intrinsically safe for Class I, Zone 0, AEX ia IIC T4 T_a = 70 °C.

Temperature code T4 at 70°C max ambient.

Installation drawing: 9150077-944.

Non-incendive for Class I, Division 2, Groups A, B, C, and D.

Suitable for Class II, III, Division 2, Groups F and G.

Non-incendive maximum operating parameters: 42 V, 25 mA.

Temperature code T4A at 70 °C max ambient.

Approval valid for HART option.

Canadian Standards Association (CSA) approval

Certificate 1250250.

Figure B-2. Approval Label Canadian Standards Association (CSA)

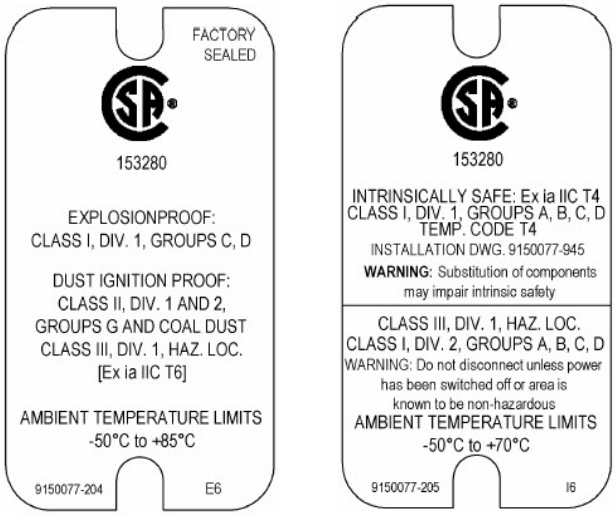

E6 Explosion-proof for Class I, Division 1, Groups C and D.
Dust-ignition proof for Class II, Division 1 and 2, Groups G and coal dust.
Dust-ignition proof for Class III, Division 1, hazardous locations [Ex ia IIC T6].
Ambient temperature limits: -50°C to + 85°C.
Approval valid for Modbus and HART option.

I6 Intrinsically safe: Ex ia IIC T4.
Intrinsically safe for Class I, Division 1, Groups A, B, C, and D.
Temperature code T4.
Installation drawing: 9150077-945.
Non-incendive for Class III, Division 1, hazardous locations.
Non-incendive for Class I, Division 2, Groups A, B, C, and D.
Ambient temperature limits: -50 °C to + 70 °C.
Approval valid for HART option.

B.3.2 European certifications

ATEX approval

Special Conditions For Safe Use (X):

1. On application of the transmitter with plastic-covered probes, in an explosive gas atmosphere, precaution shall be taken to avoid danger of ignition due to electrostatic charges on the probe.

2. On application of the transmitter in an explosive dust atmosphere, the transmitter shall be installed in such a way that the risk from electrostatic discharges and propagating brush discharges caused by rapid flow of dust at the label is avoided.

3. For probes and flanges containing light metals, an ignition hazard due to impact or friction needs to be avoided according to IEC 60079-0 clause 8.3, when used as EPL Ga/Gb equipment.

E1 Flameproof:

Certificate: KEMA 01ATEX2220X

CE 0575

II 1/2 G Ex d [ia Ga] IIC T6...T1 Ga/Gb
II 1/2 D Ex tb [ia Da] IIIC T85 °C...T450 °C Da/Db(1) or
II -/2 D Ex tb IIIC T85 °C...T135 °C -/Db
U_m = 250 V
Ambient temperature range: -50 °C(2) to +75 °C
Approval valid for HART and Modbus options.

Figure B-3. Approval Label ATEX (KEMA) and Name Plate

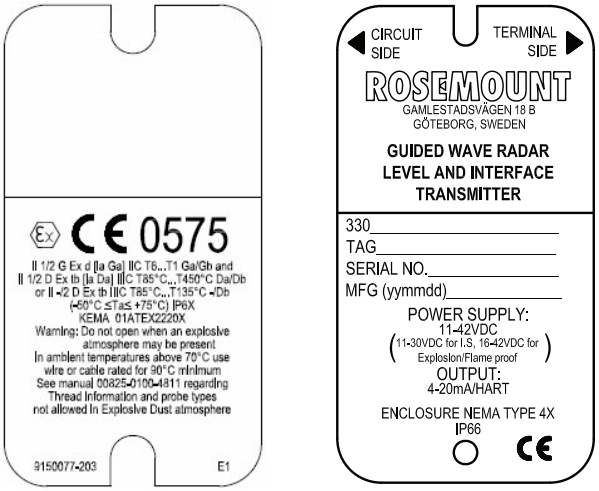

(1) Non-plastic covered probes only.
(2) -40 °F (-40 °C) for process temperature range -320 °F to -58 °F (-196 °C to -50 °C).

Table B-1. Process Temperature Limits

Maximum ambient temperature (°C)	Maximum process temperature (°C)	Temperature class / maximum surface temperature
+75	+75	T6 / T 85 °C
+75	+90	T5 / T 100 °C
+75	+125	T4 / T 135 °C
+75	+190	T3 / T 200 °C
+65	+285	T2 / T 300 °C
+55	+400	T1 / T 450 °C

Special Conditions For Safe Use (X):

1. The apparatus is not capable of withstanding the 500V test as defined in Clause 6.3.13 of EN60079-11:2012. This must be considered in any installation.

2. The Rosemount 3300 Series enclosure is made of aluminum alloy and given a protective polyurethane paint finish; however, care should be taken to protect it from impact or abrasion if located in zone 0.

3. The probes may contain plastic materials greater than 4 cm^2 or be coated with plastic and these can present an electrostatic risk if rubbed or placed in a fast moving air flow.

4. The probes may contain light alloys which can present a risk from frictional ignitions. Care should be taken to protect them from mechanical impact during use or installation.

I1 Intrinsic safety:

Certificate: BAS02ATEX1163X

CE 0575

Ex II 1 G Ex ia IIC T4 Ga (-50 °C ≤ T_a ≤ +70 °C)
U_i = 30 V, I_i = 130 mA, P_i = 1.0 W, L_i = C_i = 0
Ambient temperature limit: -50 °C ≤ T_a ≤ +70 °C
Functional voltage range: 11-42 Vdc
Intrinsically safe version: 11-30 Vdc
Approval valid for HART option.

Figure B-4. Approval Label ATEX (BASEEFA) and Name Plate

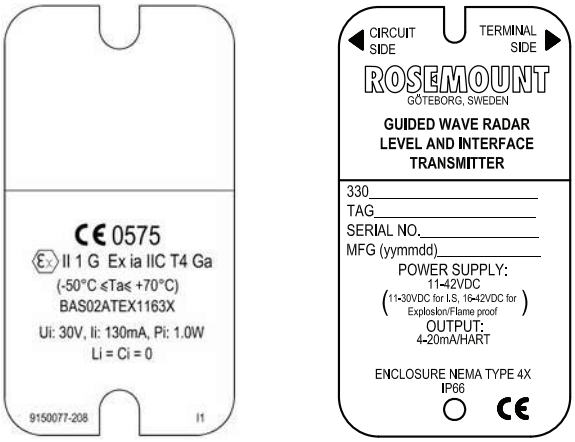

Special Conditions For Safe Use (X):

1. The apparatus is not capable of withstanding the 500 V test as defined in Clause 6.3.13 of EN 60079-11:2012. This must be considered in any installation.
2. The Rosemount 3300 Series enclosure is made of aluminum alloy and given a protective polyurethane paint finish; however, care should be taken to protect it from impact or abrasion.
3. The probes may contain light alloys which can present a risk from frictional ignitions. Care should be taken to protect them from mechanical impact during use or installation.
4. The probes may contain plastic materials greater than 4 cm2 or be coated with plastic and these can present an electrostatic risk if rubbed or placed in a fast moving air flow.
5. The cable entry must use a suitable Certified Cable Gland which provides strain relief and any unused openings to the equipment must be blanked off to maintain a degree of protection of at least IP66.

N1 Type N approvals : non-sparking / intrinsic safety

Certificate: Baseefa12ATEX0089X

CE 0575

Ex ic nA IIC T4 Gc (-50 °C ≤ T_a ≤ +70 °C)

U_N = 42.4 V

Approval valid for HART option.

Figure B-5. Approval Label ATEX (BASEEFA)

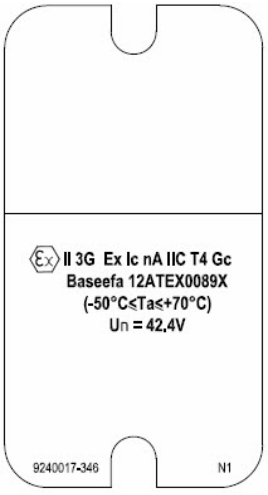

B.3.3 EAC certifications

Technical Regulations Customs Union (EAC)

EM, IM: Contact an Emerson Process Management representative for additional information.

B.3.4 Brazilian certifications

NCC/INMETRO Approvals

Special Conditions For Safe Use (X):

1. On application of the transmitter with plastic covered probes, in an explosive gas atmosphere, precaution shall be taken to avoid danger of ignition due to electrostatic charges on the probe.

2. On application of the transmitter in an explosive dust atmosphere, the transmitter shall be installed in such a way that the risk from electrostatic discharges and propagating brush discharges caused by rapid flow of dust at the label is avoided.

3. For probes and flanges containing light metals, an ignition hazard due to impact or friction needs to be avoided according to IEC 60079-0 clause 8.3, when used as EPL Ga/Gb equipment.

E2 Explosion-proof:
Ex d [ia Ga] IIC T6...T1 Ga/Gb
Ex tb [ia Da] IIIC T85 °C...T450 °C Da/Db
Ex tb IIIC T85 °C...T135 °C Db

Power supply: 16 - 42 Vdc
Current/output: 4-20 mA HART Protocol
V_{max} = 250 V (maximum voltage)

Certificate number: NCC 11.0237X

Standards:
ABNT NBR IEC 60079-0:2013, ABNT NBR IEC 60079-1:2009,
ABNT NBR IEC 60079-11:2009, ABNT NBR IEC 60079-26:2008,
ABNT NBR IEC 60079-31:2011

Approval valid for HART and Modbus options.

Figure B-6. Approval Label Inmetro (NCC) and Name Plate

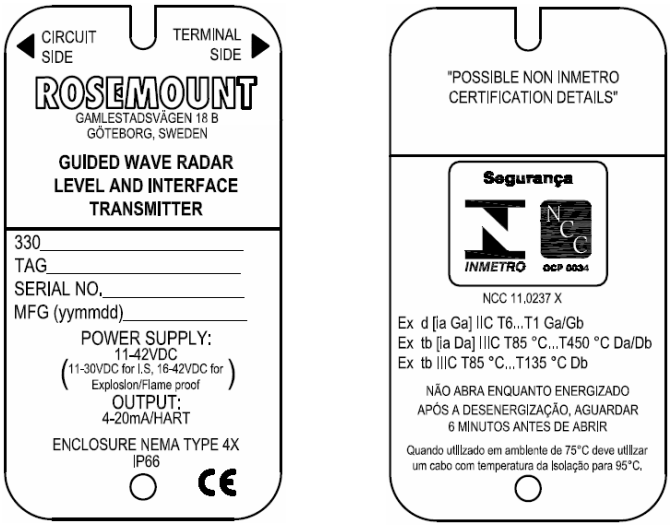

Special Conditions For Safe Use (X):

1. When the equipment is used in a hazardous area, the programming port must not be used.

2. The metal enclosure must be electrically connected to a grounding terminal. The driver used for the connection must be equivalent to a copper cable with 4 mm^2 section. The apparatus is not capable of withstanding the 500 V test as defined in Clause 6.3.12 of ABNT NBR IEC 60079-11. This must be considered in any installation.

3. The 3300 Series enclosure may be made of aluminium alloy and given a protective polyurethane paint finish; however, care should be taken to protect it from impact or abrasion if located in zone 0.

4. The probes may contain plastic materials greater than 4 cm^2 or be coated with plastic and these can present an electrostatic risk if rubbed or placed in a fast moving air flow.

5. The probes may contain light alloys which can present a risk from frictional ignitions. Care should be taken to protect them from mechanical impact during use or installation.

I2 Intrinsically Safe:
Ex ia IIC T4 Ga
Intrinsically safe parameters for the +/- terminals
U_i = 30 V, I_i = 130 mA, P_i = 1 W, C_i = 0 (negligible), L_i = 0 (negligible)
-50 °C < T_a < +70 °C
Certificate number: NCC 11.0201X

Standards:
ABNT NBR IEC 60079-0:2013, ABNT NBR IEC 60079-11:2009,
ABNT NBR IEC 60079-26:2008, ABNT NBR IEC 60529:2005

Approval valid for HART option.

Figure B-7. Approval Label Inmetro (NCC) and Name Plate

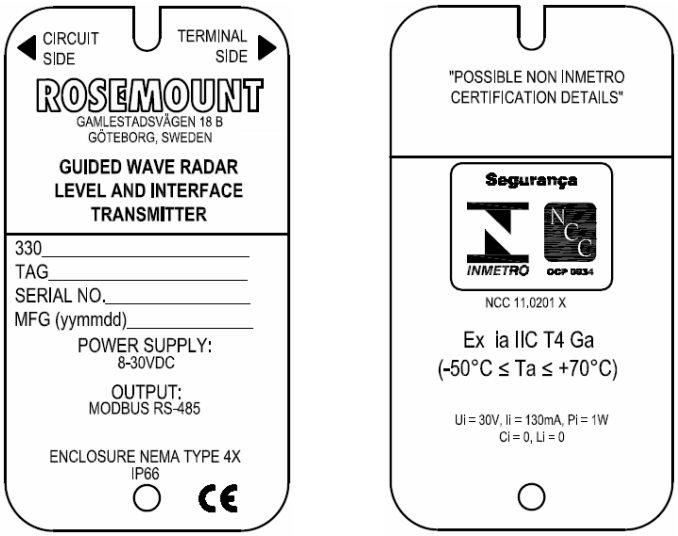

B.3.5 Chinese certifications

National Supervision and Inspection Center for Explosion Protection and Safety of Instrumentation (NEPSI) approvals

E3 Flameproof: GYJ12.1037X

Ex d ia IIC T6~T4 Gb, DIP A21 TA85 °C~TA135 °C IP66
U_m = 250 V
Approval valid for HART and Modbus® options.

I3 Intrinsically Safe: GYJ11.1537X

Ex ia IIC T4 (-50 °C < T_a < +70 °C)
U_i = 30 Vdc, I_i = 130 mA, P_i = 1.0 W, C_i = 0 nF, L_i = 0 µH
Approval valid for the HART option.

Special Conditions For Safe Use (X):

Refer to Certificates GYJ 11.1537X and GYJ12.1037X.

B.3.6 Japanese certifications

Technology Institution of Industrial Safety (TIIS) approval

E4 Flameproof with intrinsically safe probe: TC18544, TC18545

Transmitter: Ex d [ia] IIB T6 ($T_{a,\,max}$ = 60 °C)

U_m = 250 V

Probe: Ex ia IIB T6

U_o = 25.2 V, I_o = 159 mA, P_o = 1.0 W

Approval valid for HART option.

Installation drawing: 03300-00408

Special Conditions for Safe Use (X):

See certificate for details.

B.3.7 IECEx certifications

IECEx approval

Conditions of Certification (X):

1. On application of the transmitter with plastic covered probes, in an explosive gas atmosphere, precaution shall be taken to avoid danger of ignition due to electrostatic charges on the probe.

2. On application of the transmitter in an explosive dust atmosphere, the transmitter shall be installed in such a way that the risk from electrostatic discharges and propagating brush discharges caused by rapid flow of dust at the label is avoided.

3. For probes and flanges containing light metals, an ignition hazard due to impact or friction needs to be avoided according to IEC 60079-0 clause 8.3, when used as EPL Ga/Gb equipment.

E7 Flameproof:
Certificate: IECEx DEK 12.0015X
Ex d [ia Ga] IIC T6...T1 Ga/Gb
Ex tb [ia Da] IIIC T85 °C...T450 °C Da/Db(1) or
Ex tb IIIC T85 °C...T135 °C -/Db
Approval valid for HART and Modbus options.
The process temperature effects shall be taken into account, see E1 approval.

Standards:
IEC 60079-0:2011, IEC 60079-1:2007,
IEC 60079-11:2011, IEC 60079-26:2006,
IEC 60079-31:2008

Figure B-8. Approval Labels IECEx

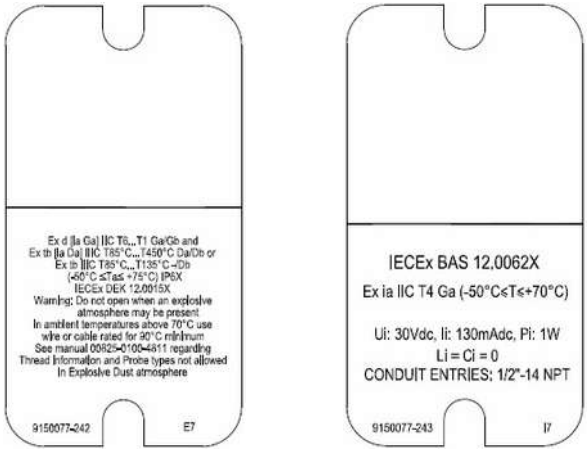

(1) *Non-plastic covered probes only.*

Conditions of Certification (X):

1. The apparatus is not capable of withstanding the 500V test as defined in Clause 6.3.13 of EN60079-11:2012. This must be considered in any installation.
2. The Rosemount 3300 Series enclosure is made of aluminum alloy and given a protective polyurethane paint finish; however, care should be taken to protect it from impact or abrasion if located in zone 0.
3. The probes may contain plastic materials greater than 4 cm^2 or be coated with plastic and these can present an electrostatic risk if rubbed or placed in a fast moving air flow.
4. The probes may contain light alloys which can present a risk from frictional ignitions. Care should be taken to protect them from mechanical impact during use or installation.

I7 Intrinsic safety:
Certificate: IECEx BAS 12.0062X
Ex ia IIC T4 (T_a = 60 °C) IP66
U_i = 30 V, I_i = 130 mA, P_i = 1 W, C_i = 0 nF, L_i = 0 mH
Approval valid for HART option.

Conditions of Certification (X):

1. The apparatus is not capable of withstanding the 500V test as defined in Clause 6.3.13 of EN60079-11:2012. This must be considered in any installation.
2. The Rosemount 3300 Series enclosure is made of aluminum alloy and given a protective polyurethane paint finish; however, care should be taken to protect it from impact or abrasion.
3. The probes may contain light alloys which can present a risk from frictional ignitions. Care should be taken to protect them from mechanical impact during use or installation.
4. The probes may contain plastic materials greater than 4 cm^2 or be coated with plastic and these can present an electrostatic risk if rubbed or placed in a fast moving air flow.
5. The cable entry must use a suitable Certified Cable Gland which provides strain relief and any unused openings to the equipment must be blanked off to maintain a degree of protection of at least IP66.

N7 Type N approvals: non-sparking/intrinsic safety
Certificate: IECEx BAS 12.0061X
Ex ic nA IIC T4 Gc (-50 °C < T_a < +70 °C)

Standards:
IEC 60079-0:2011, IEC 60079-11:2001,
IEC 60079-31:2008, IEC 60079-1:2007,
IEC 60079-26:2006

B.4 Other certifications

Overfill protection

U1 WHG Overfill Approval:
TÜV-tested and approved by DIBt for overfill protection according to the German WHG regulations.
Certificate: Z-65.16-416
Available for HART option.

B.5 Approval drawings

This section contains Factory Mutual, Canadian Standards and TIIS installation drawings. You must follow the installation guidelines presented in order to maintain certified ratings for installed transmitters.

This section contains the following drawings:

- Rosemount drawing 9150077-944, Issue 5:
  System control drawing for hazardous location installation of intrinsically safe FM approved apparatus.
- Rosemount drawing 9150077-945, Issue 4:
  Installation drawing for hazardous location installation of CSA approved apparatus.
- TIIS drawing TIIS-R-IS 03300-00408:
  Installation drawing for hazardous location installation of TIIS approved apparatus.

Figure B-9. System Control Drawing for Hazardous Location Installation of Intrinsically Safe FM Approved Apparatus

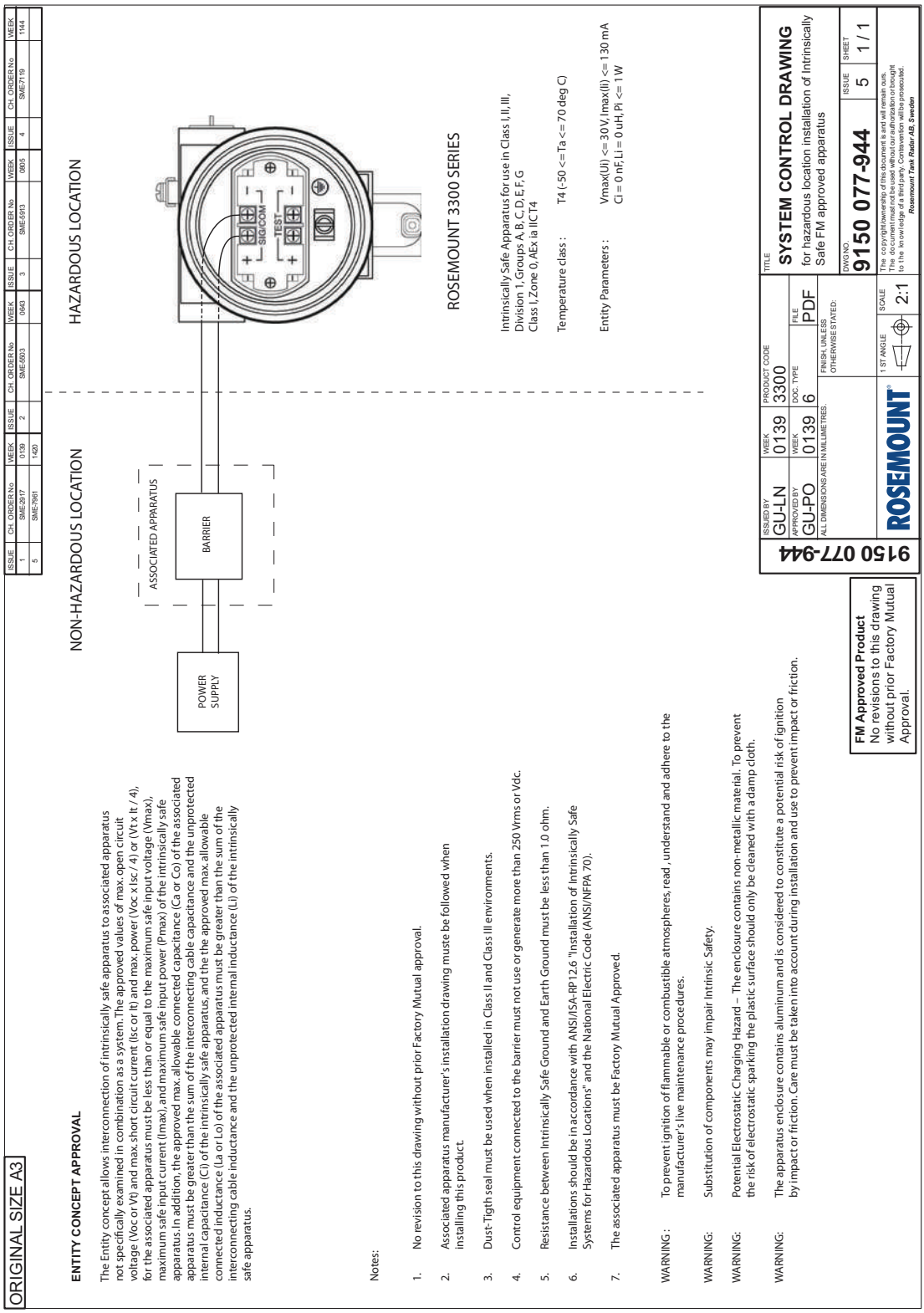

Figure B-10. System Control Drawing for Hazardous Location Installation of CSA Approved Apparatus

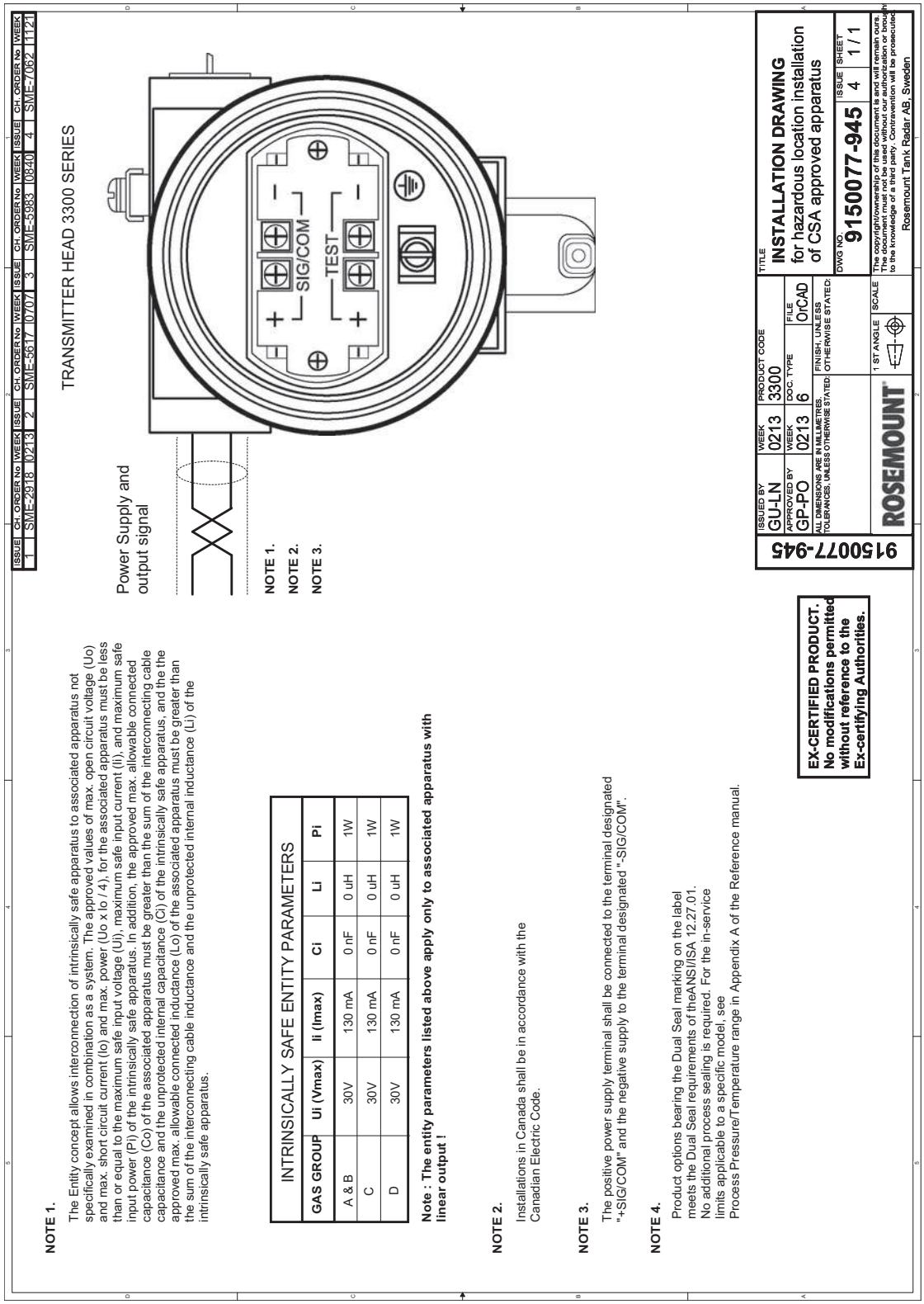

Figure B-11. Installation Drawing for Hazardous Location Installation of TIIS Approved Apparatus

仕様文書 TIIS-R-IS　　2007/3/27 改訂

国内(TIIS)防爆仕様 1)

対象機器	＜3301/3302＞
防爆記号	本体 Ex d [ia] IIB T6,　プローブ Ex ia IIB T6
定　　格	本安回路 Uo = 25.2V　Io = 159mA　Po = 1.0W
	非本安回路
	電源 DC 16~42V
	出力信号 4~20mA
	許容電圧 AC 250V 50/60Hz, DC250V
周囲温度	-20℃～60℃

システム構成図 2)

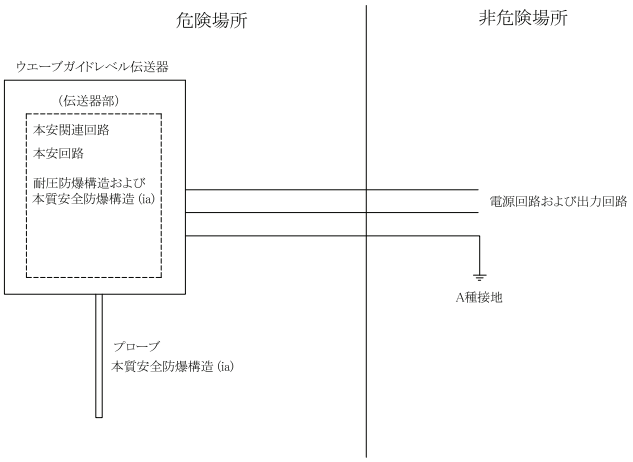

03300-00408A

1)　注：改造禁止。
静電気防止のためプローブ部の乾拭き禁止。
接地端子は非危険場所において、単独で A 種接地工事に準じて接地すること。
爆発性ガスまたは蒸気が存在する場所ではカバー開放禁止。
外部導線は耐熱温度 70℃以上のケーブルを使用すること。

2)　電源回路および出力回路はその入力電源,機器内部の電圧等が正常状態および異常状態においても AC/DC250V 50/60Hz を超えないものとする。

Emerson Process Management

Appendix C Rosemount 3300 Series with HART® to Modbus® Converter

Safety messages ..... page 177
Introduction ..... page 178
Workflow ..... page 179
Mechanical installation ..... page 179
Electrical installation ..... page 180
Establish HART communication ..... page 184
Transmitter configuration ..... page 186
Modbus communication protocol configuration ..... page 186
Alarm handling ..... page 193
Common Modbus host configuration ..... page 195
Specific Modbus host configuration ..... page 199
Troubleshooting ..... page 204
HMC Firmware Upgrade in Rosemount Radar Master ..... page 205
Specifications ..... page 208

C.1 Safety messages

Procedures and instructions in this section may require special precautions to ensure the safety of the personnel performing the operations. Information that raises potential safety issues is indicated by a warning symbol (⚠). Please refer to the following safety messages before performing an operation preceded by this symbol.

⚠ WARNING

Failure to follow safe installation and service guidelines could result in death or serious injury.

- Make sure the transmitter is installed by qualified personnel and in accordance with applicable code of practice.
- Use the equipment only as specified in this manual. Failure to do so may impair the protection provided by the equipment.
- Do not perform any services other than those contained in this manual unless you are qualified.

Explosions could result in death or serious injury.

- Verify that the operating environment of the transmitter is consistent with the appropriate hazardous locations specifications.
- To prevent ignition of flammable or combustible atmospheres, disconnect power before servicing.
- Before connecting a HART®- based communicator in an explosive atmosphere, make sure the instruments in the loop are installed in accordance with intrinsically safe or non-incendive field wiring practices.
- To avoid process leaks, only use O-ring designed to seal with the corresponding flange adapter.

Electrical shock can result in death or serious injury.

- Avoid contact with the leads and terminals. High voltage that may be present on leads can cause electrical shock.
- Make sure the main power to the Rosemount 3300 Series Transmitter is off and the lines to any other external power source are disconnected or not powered while wiring the transmitter.

Probes with non-conducting surfaces

- Probes covered with plastic and/or with plastic discs may generate an ignition-capable level of electrostatic charge under certain extreme conditions. Therefore, when the probe is used in a potentially explosive atmosphere, appropriate measures must be taken to prevent electrostatic discharge.

C.2 Introduction

The Rosemount 3300 Series Transmitter is a Modbus compatible measurement device that supports communication with a Remote Terminal Unit (RTU) using a subset of read, write, and diagnostic commands used by most Modbus-compatible host controllers. The transmitter also supports communication through Levelmaster and Modbus ASCII protocols.

The HART to Modbus Converter (HMC) module is located inside the Rosemount 3300 transmitter enclosure and provides power to and communicates with the transmitter through a HART interface.

Figure C-1. System Overview

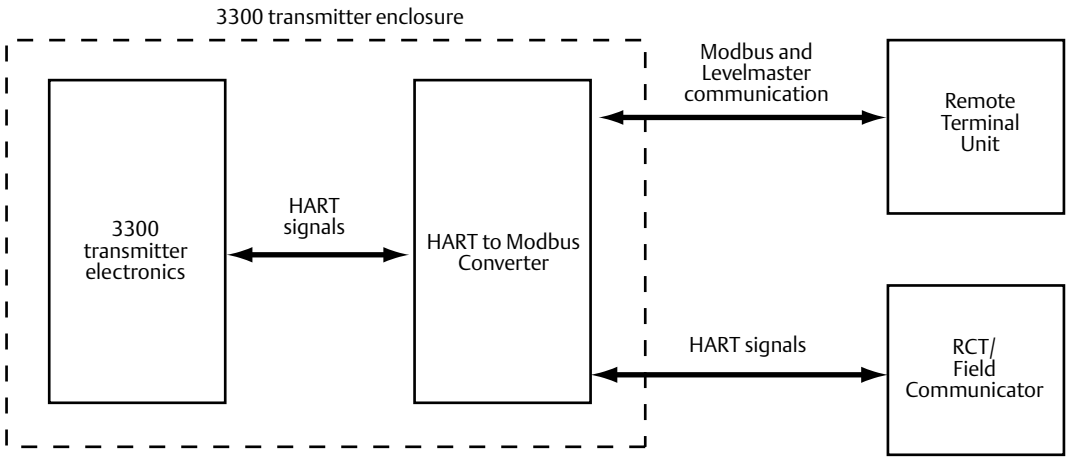

During normal operation, the HMC "mirrors" the contents of process variables from the 3300 transmitter to the Modbus registers. To configure the 3300 transmitter, it is possible to connect a configuration tool to the HMC. See "Transmitter configuration" on page 186 for more information.

C.3 Workflow

Overview of workflow for commissioning a Rosemount 3300 transmitter with Modbus protocol:

1. Mount the transmitter on the tank.
2. Connect the power and communication wires.
3. Establish HART communication with the transmitter through Rosemount Radar Configuration Tools (RCT), or a Field Communicator. This is done by:
   - Connecting to the HART terminals, or
   - Connecting to the MA (+)/MB (-) terminals (tunneling mode)
4. Configure the transmitter.
5. Configure the Modbus communication.
6. Configure Modbus host.
7. Verify output values as reported by the transmitter.

C.4 Mechanical installation

For instructions on how to mount the Rosemount 3300 transmitter, refer to "Mechanical installation" on page 29.

C.5 Electrical installation

Note
For general electrical installation requirements, including grounding requirements, refer to "Electrical installation" on page 52.

To connect the Rosemount 3300 Series:

⚠ 1. Disconnect/shut off the electrical power to transmitter head and then open the instrument cover. Do not remove the cover in an explosive atmosphere with a live circuit.

2. Pull the cable through the cable gland/conduit. For the RS-485 bus, use shielded twisted pair wiring, preferably with an impedance of 120Ω (typically 24 AWG) in order to comply with the EIA-485 standard and EMC regulations. The maximum cable length is 4000 ft. (1200 m).

3. Make sure that the transmitter housing is grounded, then connect wires according to Figure C-2 and Table C-1. Connect the lead that originates from the "A" line from the RS-485 bus to the terminal marked MB (-), and the lead that originates from the "B" line to the terminal marked MA (+).

4. If it is the last transmitter on the bus, connect the 120Ω termination resistor.

5. Connect the leads from the positive side of the power supply to the terminal marked PWR +, and the leads from the negative side of the power supply to the terminal marked PWR -. The power supply cables must be suitable for the supply voltage and ambient temperature, and approved for use in hazardous areas, where applicable.

6. Attach and tighten the housing cover. Tighten the cable gland, then plug and seal any unused terminals, and connect the power supply.

Figure C-2. Field Wiring Connections

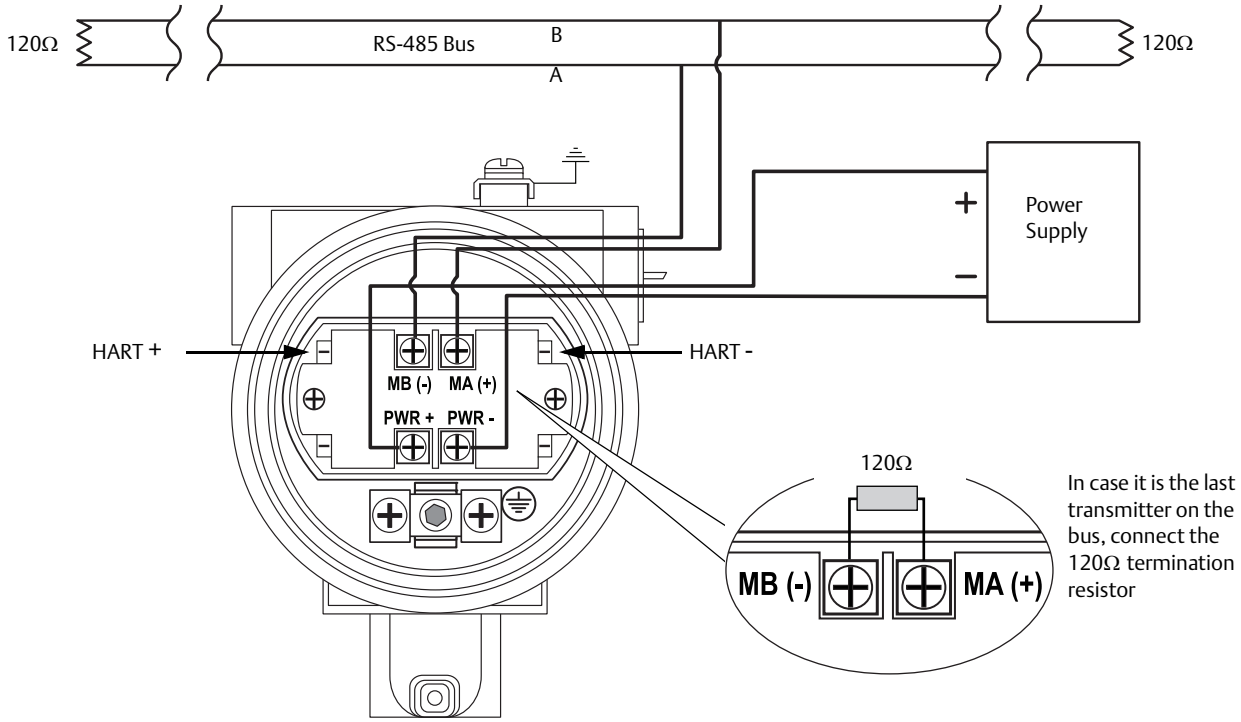

C.5.1 Connection terminals

The connection terminals are described in Table C-1 below:

Table C-1. Connection Terminals

Connector label	Description	Comment
HART +	Positive HART connector	Connect to PC with RCT software, Field Communicator, or other HART configurators.
HART -	Negative HART connector	
MA (+)	Modbus RS-485 B connection (RX/TX+)(1)	Connect to RTU
MB (-)	Modbus RS-485 A connection (RX/TX-)(1)	
PWR +	Positive Power input terminal	Apply +8 Vdc to +30 Vdc (max. rating)
PWR -	Negative Power input terminal	

(1) The designation of the connectors do not follow the EIA-485 standard, which states that RX/TX- should be referred to as 'A' and RX/TX+ as 'B'.

Figure C-3. Connection Terminals for Rosemount 3300 with HART to Modbus Converter

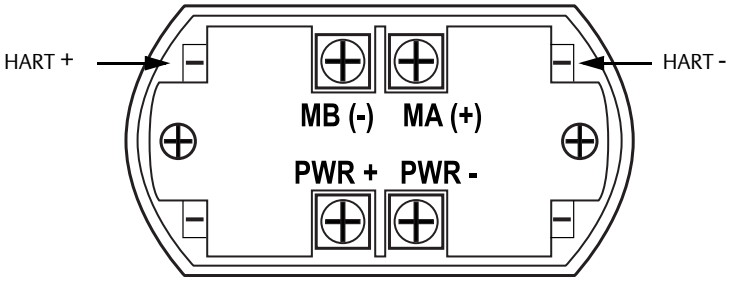

C.5.2 RS-485 bus

- The Rosemount 3300 Series Transmitter does not provide electrical isolation between the RS-485 bus and the transmitter power supply.
- Maintain a bus topology and minimize stub length.
- Figure C-4 identifies multidrop wiring topology, where up to 32 devices may be wired on one RS-485 bus.
- The RS-485 bus needs to be terminated once at each end, but should not be terminated elsewhere on the bus.

C.5.3 Installation cases

Install the Rosemount 3300 Series Transmitters as shown in Figure C-4.

- Use common ground for Modbus Master and power supply.
- The Power cables and RS-485 Bus are in the same cable installation.
- A ground cable is installed and shall be used (cable size $\geq$ 4 mm according to IEC60079-14, or size according to applicable national regulations and standards). A properly installed threaded conduit connection may provide sufficient ground.
- The cable shielding is grounded at master site (optional).

⚠ **Note**
The HMC equipped transmitter contains intrinsically safe circuits that require the housing to be grounded in accordance with national and local electrical codes. Failure to do so may impair the protection provided by the equipment.

Figure C-4. Multidrop Connection of 3300 Transmitters

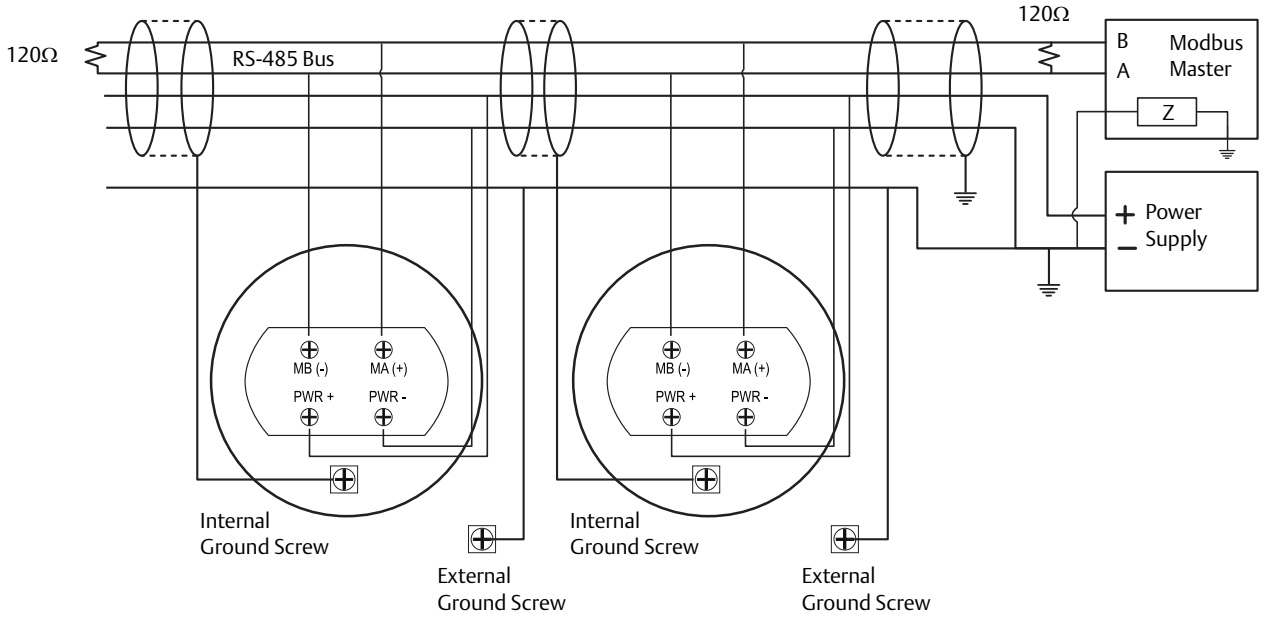

Alternatively, the Rosemount 3300 Series Transmitters can be installed as shown in Figure C-5. If this wiring layout is used, there is an increased risk for communication disturbances due to differences in potential between grounding points. By using the same grounding point for Modbus Master and Power Supply, this risk is reduced.

Figure C-5. Alternative Multidrop Connection of 3300 Transmitters

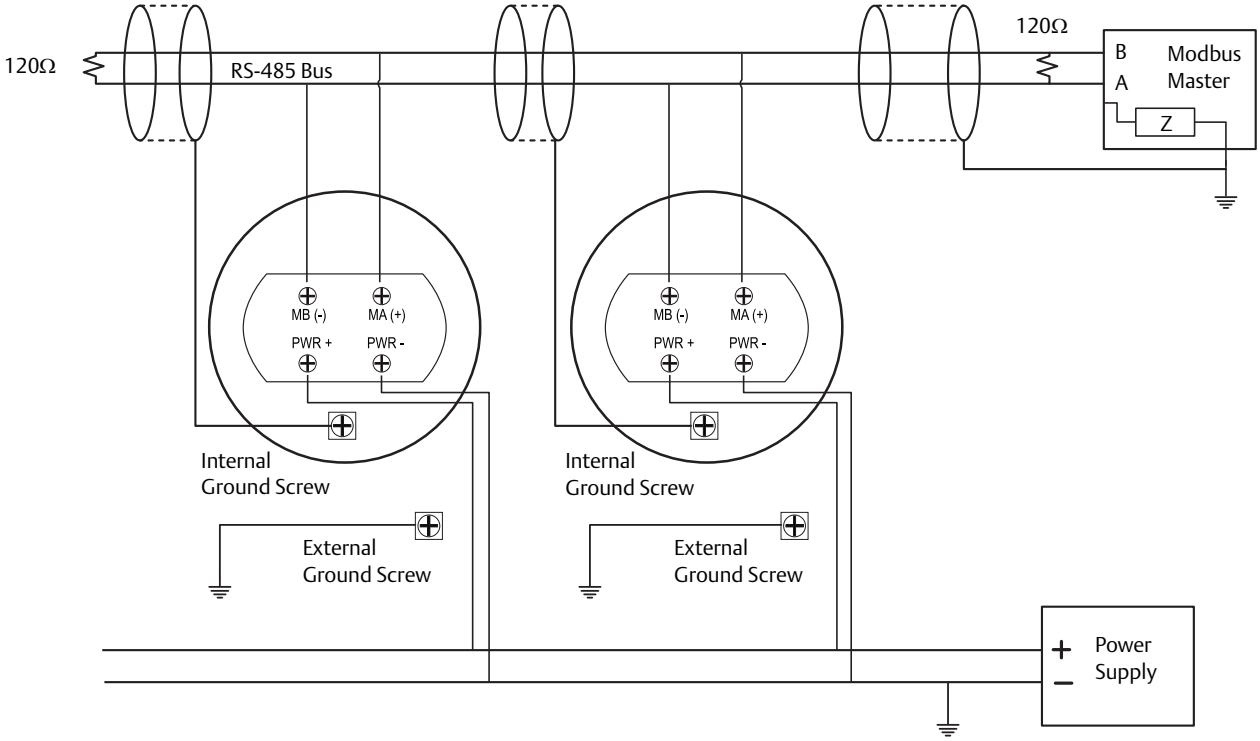

Star topology

For a Star Topology Connection of the Rosemount 3300 Series, the transmitter with the longest cable run needs to be fitted with a 120-Ω termination resistor.

Figure C-6. Star Topology Connection of 3300 Transmitters

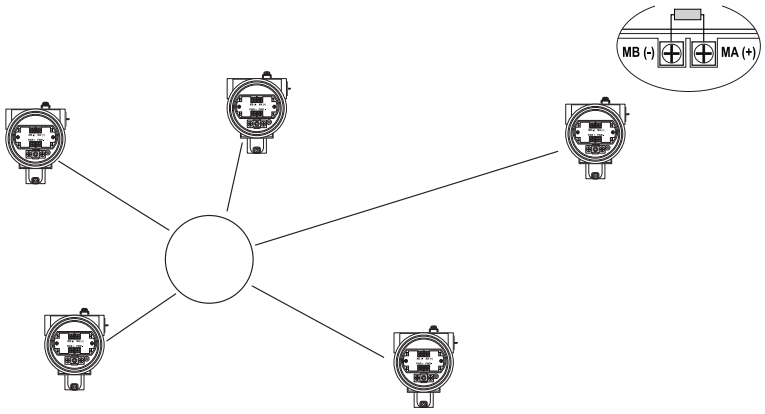

For Star Topology connection, connect the 120Ω termination resistor to the transmitter with the longest cable run.

C.6 Establish HART communication

The Rosemount 3300 Series Transmitter can be configured using the Rosemount Radar Configuration Tools (RCT) PC software, or a Field Communicator. Configuration is done by sending HART commands through the HART to Modbus Converter (HMC) to the 3300 transmitter electronics. To establish HART communication, connect to the MA (+)/MB (-) terminals, or to the HART terminals. Both alternatives are described below.

C.6.1 Connect to the MA (+)/MB (-) terminals

The 3300 level transmitter can be configured with RCT using the MA (+), MB (-) terminals.

An RS-485 Converter is required to connect to the transmitter.

The transmitter will try to establish communication using different protocols during 20 second timeslots from time of startup.

Figure C-7. RS-485 Communication after startup

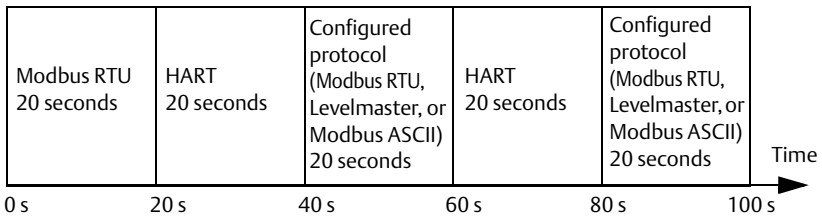

The transmitter will continue to use a communication protocol once communication has been established.

To configure the 3300 level transmitter using RCT and the MA (+), MB (-) terminals, do the following:

1. Connect the RS-485 Converter to the MA (+), MB (-) terminals.
2. Connect the power wires (or cycle power) to the transmitter.
3. Wait 20 seconds.
4. In RCT, select **Poll Address** in the drop-down list (also see note below). Select the button to the left of the drop-down list to start polling.

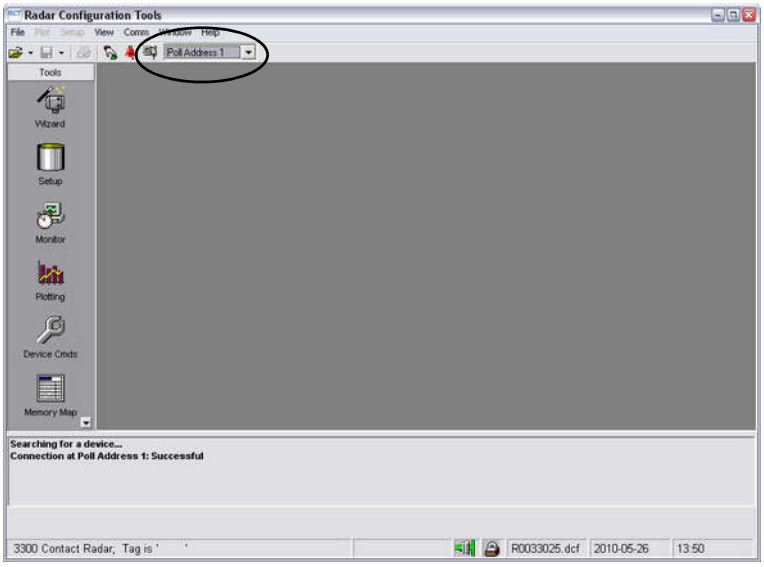

5. After connection to the transmitter, perform the necessary configuration.
6. When the configuration is completed, disconnect the RS-485 Converter, connect the Modbus communication wires, and cycle power to the transmitter
7. Verify communication between the transmitter and the RTU is established (can take up to 60 seconds from startup).

Note
If there are multiple 3300 Modbus units on the bus with HART address 1, it will not be possible to establish communication (by default the transmitters have HART address 1). To establish communication in this case, make sure the 3300 transmitter is alone on the bus. Disconnect or turn off power from any other devices.

C.6.2 Connect to the HART terminals

To configure the Rosemount 3300 Series Transmitter, connect the communicator or PC to the HART terminals using a HART modem, see Figure C-3 on page 182. Both the configuration tool and the RS-485 bus can be connected simultaneously. Configuration data is sent with HART commands through the HMC to the 3300 transmitter electronics, as illustrated in Figure C-1 on

page 179. Note that the power supply must be connected during configuration, see also “Electrical installation” on page 180.

Note
Measurement data is not updated to the Modbus Master when a configuration tool is connected.

C.7 Transmitter configuration

Configuration data, such as Tank Height, Upper Null Zone, dielectric constants, and other basic parameters, are configured in the same way as for a standard Rosemount 3300 Series Transmitter. For more information, see the Rosemount 3300 Series Quick Start Guide (document number 00825-0100-4811).

Make sure that the measurement unit of the Primary Variable (PV) matches the configuration of the Modbus Host since the transmitter output value does not include any information on associated measurement units.

For further information on basic configuration, see Section 4: Basic Configuration/Start-Up.

Note
The Rosemount 3300 Series Transmitter with Modbus protocol is configured to HART address 1 at factory. This reduces power consumption by locking the analog output at 4 mA.

C.8 Modbus communication protocol configuration

The Rosemount 3300 Series Transmitter can communicate with RTUs using Modbus RTU (often referred to as just “Modbus”), Modbus ASCII, and Levelmaster (also known as “ROS,” “Siemens,” or “Tank” protocol).

Table C-2. List of RTU Supported Protocols

RTU	Protocols
ABB Totalflow	Modbus RTU, Levelmaster
Bristol™ ControlWave™ Micro	Modbus RTU
Emerson Process Management ROC800 Series	Modbus RTU, Levelmaster(1)
Emerson Process Management FloBoss™ 107	Modbus RTU, Levelmaster(1)
Kimray DACC 2000/3000	Levelmaster
ScadaPack	Modbus RTU
Thermo Electron Autopilot	Modbus RTU, Levelmaster

(1) Levelmaster protocol should be used when using the Emerson Process Management Digital Level Sensor (DLS) User Program or Application Module together with the device. Use Modbus RTU in other cases.

Modbus ASCII is not commonly used, since it doubles the amount of bytes for the same message as the Modbus RTU.

If you do not have any of these RTUs, check your RTU manual to see which protocols it supports.

C.8.1 Using RCT to change communication parameters

Note
To change Modbus communication parameters, the Rosemount 3300 Series Transmitter must use HART address 1, the default address.

Note
After changing communication parameters, disconnect the HART modem and wait at least 60 seconds for the change to take effect.
In case the MA (+)/MB (-) terminals are used for connection to the HMC, disconnect the RS-485 Converter, cycle power to the transmitter and wait up to 60 seconds for the change to take effect.

To change the Modbus address and communication parameters[(1)] in Rosemount Radar Configuration Tools (RCT):

1. Start RCT and connect to the transmitter.
2. In the RCT workspace Project Bar, select the **Setup** icon to open the *Setup* window.

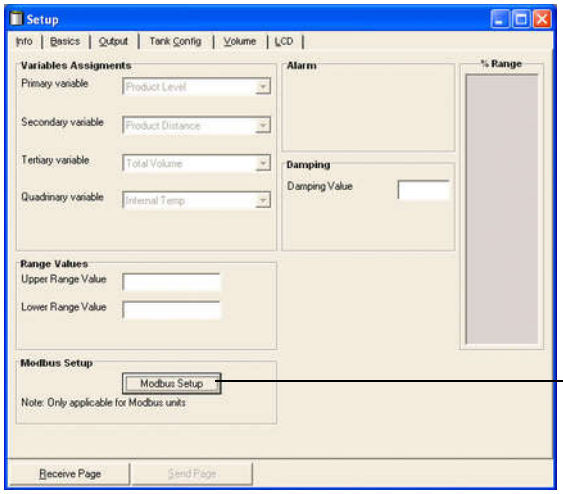

3. Select the **Output** tab.
4. Select the **Modbus Setup** button.

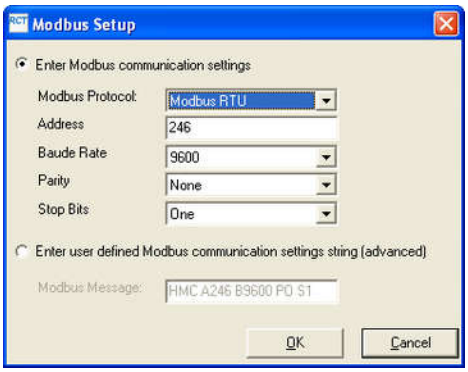

(1) The Modbus Setup function is available in RCT version 2.03.0002 and later.

5. In the *Modbus Setup* window, select Modbus protocol and enter the desired Modbus address.

6. Enter the baud rate, parity, and stop bits, then select **OK**.

It is also possible to enter a user-defined Modbus Message in the Modbus String area.

See separate sections below for more details regarding each Modbus protocol.

C.8.2 Using a Field Communicator to change communication parameters

Note
To change Modbus communication parameters, the Rosemount 3300 Series Transmitter must use HART address 1, the default address.

Note
After changing communication parameters, disconnect the Field Communicator and wait up to 60 seconds for the change to take effect.

The Modbus communication parameters can be changed by entering a text string in the HART Message parameter. See separate sections below for details regarding each Modbus protocol and what strings to use.

When using the Field Communicator, the Message Area is reached using HART command [1,4,1,6].

C.8.3 Modbus RTU communication setup

The Rosemount 3300 Series is configured with the default Modbus RTU address 246, and with the following Modbus RTU communication parameter default settings:

Table C-3. Modbus RTU Communication Parameters

Parameter	Default value	Configurable values
Baud Rate	9600	1200, 2400, 4800, 9600, 19200
Start Bits(1)	One	One
Data Bits(1)	Eight	Eight
Parity	None	None, Odd, Even
Stop Bits	One	One or Two
Address range	246	1-255

(1) Start Bits and Data Bits cannot be changed.

To reset the communication parameters to default Modbus RTU settings, use the following Modbus Message:

HMC

Modbus RTU Parameter Configuration Example

You want to use address 44 for the 3300 transmitter, and the following communication parameters are used by the host:

Table C-4. Communication Parameters Used by the Host (example)

Parameter	Value
Baud Rate	4800
Start Bits	One
Data Bits	Eight
Parity	Odd
Stop Bits	Two

To configure the Rosemount 3300 Series Transmitter to communicate with the host in this example, the following text string is written to the HART Slave 1 Message Area:

HMC A44 B4800 PO S2.

HMC: These three letters are used for safety and will eliminate the risk of changing the configuration data by mistake.

A44: A indicates that the following number is the new address (address 44). Leading zeroes are not needed.

B4800: B indicates that the following number is the new baud rate (1200, 2400, 4800, 9600, 19200).

PO: P identifies the following letter as parity type (O = odd, E = even, and N = none).

S2: S indicates that the following figure is the number of stop bits (1 = one, 2 = two).

Only values that differ from the current values need to be included. For example, if only the address is changed, the following text string is written into the 3300 (HART Slave 1) Message Area:

HMC A127,

indicates that 127 is the new address.

C.8.4 Levelmaster communication setup

The default and configurable parameter values can be found in Table C-5.

Table C-5. Levelmaster Communication Parameters

Parameter	Default value	Configurable value
Baud Rate	9600	1200, 2400, 4800, 9600, 19200
Start Bits	One	One
Data Bits	Seven	Seven, Eight
Parity	None	None, Odd, Even
Stop Bits	One	One or Two
Address	1	1-99

To reset the communication parameters to default Levelmaster settings, use the following Modbus Message:

HMC M2

Levelmaster Parameter Configuration Example

You want to use address 2 for the Rosemount 3300 Series Transmitter and the host uses the following parameters:

Table C-6. Parameters Used by the Host (in case of Levelmaster, example)

Parameter	Value
Baud Rate	9600
Start Bits	One
Data Bits	Seven
Parity	None
Stop Bits	One

To configure the Rosemount 3300 Series Transmitter to communicate with the host in this example, the following text string is written to the Modbus Message area.

HMC M2 A2 B9600 D7 PN S1.

Note
Include all the parameters when writing to the message area.

Note that an address must be unique on the bus.

HMC: These three letters are used for safety and will eliminate the risk of changing the configuration data by mistake.

M2: This means that the Levelmaster protocol is to be used.

A2: A indicates that the following is the new address (address 2). Leading zeroes are not needed.

B9600: B indicates that the following number is the new baud rate (1200, 2400, 4800, 9600, 19200).

D7: D indicates that the following data bits are to be used (7 = seven, 8 = eight).

PN: P identifies the following letter as parity type (O = odd, E = even, and N = none).

S1: S indicates that the following figure is the number of stop bits (1 = one, 2 = two).

Note
Start Bits are not configurable and cannot be set.

In Table C-7 and Table C-8 is a description of the implemented functions of Levelmaster protocol in the HMC.

Table C-7. Implemented Functions of Levelmaster Protocol

Input format	Description	Output format
UnnN?	Return ID number	UnnNnnCcccc
UnnNmm	Set ID number	UnnNOKCcccc
UnnF?	Return number of floats	UnnFxCcccc
UnnFx?	Set number of floats	UnnFOKCcccc
Unn?	Return floats and other data	UnnDddd.ddFfffEeeeeWwwwCcccc(1)

(1) In this case, number of floats is set to 1. If number of floats is set to 2, the Output Format would be: UnnDddd.ddDddd.ddFfffEeeeeWwwwCcccc

Note
If one float is sent, it is “Float1”. If two floats are sent, it is “Float 1” before “Float 0”.

Table C-8. Letters and Expressions Used in Previous Tables

Letter	Description
nn	nn is used to identify slave to respond, nn is a number 00-99 or * * (wildcard). The EmulCtrl Address Holding register can be configured to a higher value than 99. In that case, the address will be truncated to 99.
mm	mm is the new ID number for the slave; mm is a number 00-99.
x	x is the number of floats returned when slave receives Unn?, x is a number 0-2.
cccc	Is the 16 bit CRC checksum, cccc are hexadecimal characters.
ddd.dd	ddd.dd is the distance value from slave 1. Note that the first d can also be a ‘-’ (minus).
Float 1	Slave 1 PV.
Float 0	Slave 1 SV.
fff	The temperature value. Configured by Holding Register 3208 in HMC.(1)
eeee	An error value. Bit 0: Invalid SV value (Float 0). Bit 8: Invalid Temperature value. Bit 12: Invalid PV value (Float 1).
Wwww	A warning value, not used in this implementation.

(1) Any of the four available variables from any of the five HART slaves can be selected as the temperature source. The least four significant bits (bit 0-3) select the variable number. Bits 4-7 select the HART slave address. If invalid values are used, the temperature value will be invalid, with no Error bit set.
For example, if we want to use FV from HART Slave 3 as temperature source, we have to write the value 34 Hex (52 decimal).

C.8.5 Modbus ASCII communication setup

The parameter, default, and configurable values are shown in Table C-9 below.

Table C-9. Modbus ASCII Communication Parameters

Parameter	Default value	Configurable values
Baud Rate	9600	1200, 2400, 4800, 9600, 19200
Start Bits	One	One
Data Bits	Seven	Seven, Eight
Parity	None	None, Odd, even
Stop Bits	One	One or Two
Address	1	1-255

To reset the communication parameters to default Modbus ASCII settings, use the following Modbus Message:

HMC M1

Modbus ASCII Parameter Configuration Example

You want to use address 246 for the Rosemount 3300 Series Transmitter and the host uses the following parameters:

Table C-10. Parameters Used by the Host (in case of Modbus ASCII, example)

Parameter	Value
Baud Rate	9600
Start Bits	One
Data Bits	Seven
Parity	None
Stop Bits	One

To configure the Rosemount 3300 Series Transmitter to communicate with the host in this example, the following text string is written to the Modbus Message area.

HMC M1 A246 B9600 D7 PN S1.

Note
Include all the parameters when writing to the message area.

Note that an address must be unique on the bus.

HMC: These three letters are used for safety and will eliminate the risk of changing the configuration data by mistake.

M1: This means that the Modbus ASCII protocol is to be used.

A246: A indicates that the following number is the new address (address 246). Leading zeroes are not needed.

B9600: B indicates that the following number is the new baud rate (1200, 2400, 4800, 9600, 19200).

D7: D indicates that the following data bits are to be used (7 = seven, 8 = eight).

PN: P identifies the following letter as parity type (O = odd, E = even, and N = none).

S1: S indicates that the following figure is the number of stop bits (1 = one, 2 = two).

Note
Start Bits are not configurable and cannot be set.

C.9 Alarm handling

Note
If the Modbus communication setup has been changed, but the transmitter has not yet started to use the new configuration, then you need to disconnect the HART modem and wait up to 60 seconds for the change to take effect.

In case the MA (+)/MB (-) terminals are used for connection to the HMC, disconnect the RS-485 Converter, cycle power to the transmitter and wait up to 60 seconds for the change to take effect.

The Modbus communication settings will otherwise be lost if you write a new message to the transmitter.

The output from the Modbus transmitter in case of an error (such as a field device malfunction) can be configured. The values for Modbus registers corresponding to PV, SV, TV, and QV will be changed accordingly (applicable registers in area 1300, 2000, 2100, and 2200).

The default alarm output value for each protocol is defined on the next page. Configuring alarm output value is optional.

Use the Modbus Message to configure the alarm output. To enter a Modbus Message in RCT, do the following (Modbus RTU shown):

1. Start RCT and connect to the transmitter.
2. In the RCT workspace Project Bar, select the **Setup** icon to open the *Setup* window.

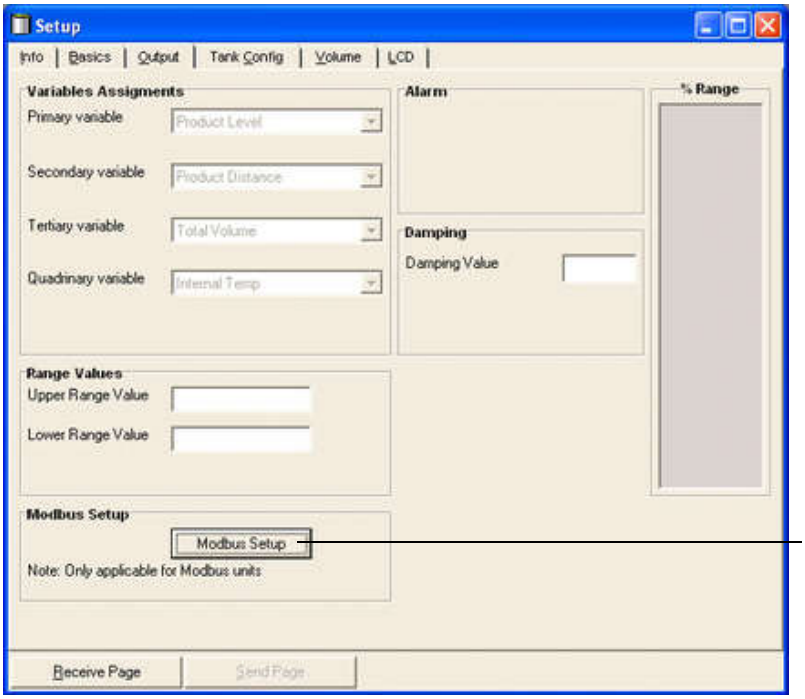

3. Select the **Output** tab.

4. Select **Modbus Setup**.

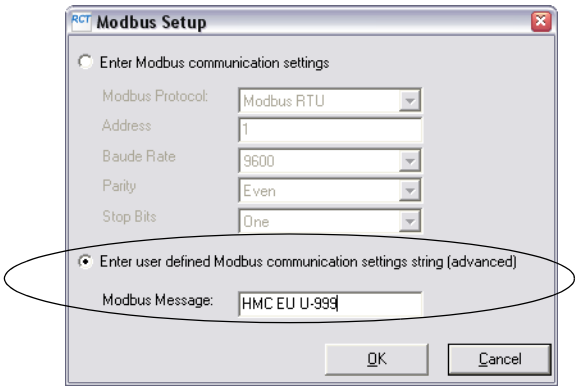

5. Enter the Modbus Message, and select **OK**.
See below for available Alarm Output Modbus Messages.

Modbus RTU

Message	Alarm Output
HMC EN	Not a number (NaN), default
HMC EF	Freeze, hold last value
HMC EU U-0.1	User defined value, -0.1 in this example

Levelmaster

Message	Alarm Output
HMC M2 EH	High value, 999.99, default
HMC M2 EL	Low value, -99.99
HMC M2 EF	Freeze, hold last value
HMC M2 EU U0	User defined value (range -99.99 to 999.99), 0 in this example

Modbus ASCII

Message	Alarm Output
HMC M1 EN	Not a number (NaN), default
HMC M1 EF	Freeze, hold last value
HMC M1 EU U-0.1	User defined value (range -99.99 to 999.99), -0.1 in this example

Note
After changing the Alarm Output configuration, disconnect the HART modem and wait up to 60 seconds for the change to take effect.
In case the MA (+)/MB (-) terminals are used for connection to the HMC, disconnect the RS-485 Converter, cycle power to the transmitter, and wait up to 60 seconds for the change to take effect.

C.9.1 Verify alarm output

To verify the alarm output, simulate a device failure by removing the transmitter head. For instructions on removing the transmitter head and re-attaching it, see "Removing the transmitter head" on page 110.

C.9.2 Use status information to evaluate measurement validity

The transmitter updates status information about the current measurement, and this status information is available as a bitfield register through Modbus communication.

By monitoring the status information it is possible to determine if the current measurement output value is valid. See "Common Modbus host configuration" on page 195 for details about the individual status bits.

C.9.3 Use Heartbeat to detect errors

By reading and evaluating the Heartbeat value from the device, it is possible to verify that the communication link between the transmitter, HMC, RTU and even the control system communicating with the RTU is working.

Assign Heartbeat to one of the transmitter variables (SV, TV, or QV). Heartbeat is increased by one for each measurement cycle in the device (until it eventually starts over at zero again).

In case this value is not updated, it means that the communication link is broken.

C.10 Common Modbus host configuration

When using Modbus RTU or Modbus ASCII, the registers to receive status and variables must be configured in the host system.

The transmission of single-precision (4 bytes) IEEE 754 floating point numbers can be rearranged in different byte orders specified by the Floating Point Format Code. The format code information, stated for each Remote Terminal Unit (RTU) respectively, specifies which registers to poll from the Rosemount 3300 Series Transmitter in order for the RTU to correctly interpret floating point numbers. The byte transmission order for each format code is demonstrated in Table C-11 below.

Table C-11. Byte Transmission Order is specified by the Floating Point Format Code

Format code	Byte transmission order	Description
0	[AB] [CD]	Straight word order, most significant byte first
1	[CD] [AB]	Inverse word order, most significant byte first
2	[DC] [BA]	Inverse word order, least significant byte first
3	[BA] [DC]	Straight word order, least significant byte first

Note
Some Modbus hosts cannot read the information described here using Input Registers (Modbus function code 4). The Input Register information can also be read using Holding Register (Function code 3). In this case, Input Register number + 5000 is used as Holding Register number.

Between host system and device, it is recommended to use 60 seconds or less between polls, and three retries.

C.10.1 Input registers

The register area starting with 1300 can be configured to have any of the four format codes. The configuration is done by setting FloatingPointFormatCode register (holding register 3000) to 0-3, as shown in Table C-11. This configuration can be done with the Rosemount Radar Master program.

Note
Depending on the slave number the 3300 transmitter is using, different registers must be used with the default slave number being 1. Slave number is determined by the HART address.

Table C-12. Output Variables for the Configurable Floating Point Format (default code 1)

Register name	Register number	Note
Slave 1 Status Conf	1300	Bit information in bitfield. Bit 0: Invalid Measurement Slave 1 PV. Bit 1: Invalid Measurement Slave 1 Non PV. Bit 2: Invalid Measurement Slave 1 Non PV. Bit 3: Invalid Measurement Slave 1 Non PV. Bit 14: HART bus busy (slave in burst or other master present) Bit 15: HTM Task not running (option not available). Note: Bit 1-3 is set when Invalid Measurement of Slave 1 Non PV. i.e. all three bits are set simultaneously.
Slave 1 PV Conf	1302	Primary variable from slave 1 represented in IEEE 754 format, using the byte order set in the FloatingPointFormatCode register.
Slave 1 SV Conf	1304	Secondary variable from slave 1 represented in IEEE 754 format, using the byte order set in the FloatingPointFormatCode register.
Slave 1 TV Conf	1306	Tertiary variable from slave 1 represented in IEEE 754 format, using the byte order set in the FloatingPointFormatCode register.
Slave 1 FV Conf	1308	Fourth variable from slave 1 represented in IEEE 754 format, using the byte order set in the FloatingPointFormatCode register.
Slave 2 data	1310-1318	Same data as for Slave 1.
Slave 3 data	1320-1328	Same data as for Slave 1.
Slave 4 data	1330-1338	Same data as for Slave 1.
Slave 5 data	1340-1348	Same data as for Slave 1.

The Rosemount 3300 Series register area starting with register 2000 is used for hosts that require Floating Point Format Code 0 (see Table C-13).

Floating Point Format Codes 2 and 3 use register areas 2100 and 2200, respectively (see Table C-14 and Table C-15).

Table C-13. Output Variables for Floating Point Format Code 0

Register name	Register number	Note
Slave 1 Status	2000	Bit information in bitfield: Bit 0: Invalid Measurement Slave 1 PV. Bit 1: Invalid Measurement Slave 1 SV. Bit 2: Invalid Measurement Slave 1 TV. Bit 3: Invalid Measurement Slave 1 FV. Bit 14: HART bus busy (slave in burst or other master present) Bit 15: HTM Task not running (option not available). Note: Bit 1-3 is set when Invalid Measurement of Slave 1 Non PV, i.e. all three bits are set simultaneously.
Slave 1 PV	2002	Primary variable from slave 1 represented in IEEE 754 format, using Floating Point Format Code 0.
Slave 1 SV	2004	Secondary variable from slave 1 represented in IEEE 754 format, using Floating Point Format Code 0.
Slave 1 TV	2006	Tertiary variable from slave 1 represented in IEEE 754 format, using Floating Point Format Code 0.
Slave 1 FV (QV)	2008	Fourth variable from slave 1 represented in IEEE 754 format, using Floating Point Format Code 0.

Table C-14. Output Variables for Floating Point Format Code 2

Register name	Register number	Note
Slave 1 Status	2100	Bit information in bitfield: Bit 0: Invalid Measurement Slave 1 PV. Bit 1: Invalid Measurement Slave 1 SV. Bit 2: Invalid Measurement Slave 1 TV. Bit 3: Invalid Measurement Slave 1 FV. Bit 14: HART bus busy (slave in burst or other master present) Bit 15: HTM Task not running (option not available). Note: Bit 1-3 is set when Invalid Measurement of Slave 1 Non PV, i.e. all three bits are set simultaneously.
Slave 1 PV	2102	Primary variable from slave 1 represented in IEEE 754 format, using Floating Point Format Code 2.
Slave 1 SV	2104	Secondary variable from slave 1 represented in IEEE 754 format, using Floating Point Format Code 2.
Slave 1 TV	2106	Tertiary variable from slave 1 represented in IEEE 754 format, using Floating Point Format Code 2.
Slave 1 FV (QV)	2108	Fourth variable from slave 1 represented in IEEE 754 format, using Floating Point Format Code 2.

Table C-15. Output Variables for Floating Point Format Code 3

Register name	Register number	Note
Slave 1 Status	2200	Bit information in bitfield: Bit 0: Invalid Measurement Slave 1 PV. Bit 1: Invalid Measurement Slave 1 SV. Bit 2: Invalid Measurement Slave 1 TV. Bit 3: Invalid Measurement Slave 1 FV. Bit 14: HART bus busy (slave in burst or other master present) Bit 15: HTM Task not running (option not available). Note: Bit 1-3 is set when Invalid Measurement of Slave 1 Non PV, i.e. all three bits are set simultaneously.
Slave 1 PV	2202	Primary variable from slave 1 represented in IEEE 754 format, using Floating Point Format Code 3.
Slave 1 SV	2204	Secondary variable from slave 1 represented in IEEE 754 format, using Floating Point Format Code 3.
Slave 1 TV	2206	Tertiary variable from slave 1 represented in IEEE 754 format, using Floating Point Format Code 3.
Slave 1 FV (QV)	2208	Fourth variable from slave 1 represented in IEEE 754 format, using Floating Point Format Code 3.

Measurement units

Measurement units for the various HART slaves are stored in input registers as a Unit Code presented in Table C-16. Conversion from Unit Code to measurement unit is given in Table C-17 on page 198.

Table C-16. Measurement Units and Corresponding Input Registers

Register name	Register number	Note
Slave 1 PV Units	104	See Table C-17 for conversion from Unit Code to Measurement Unit.
Slave 1 SV Units	108	
Slave 1 TV Units	112	
Slave 1 FV (QV) Units	116	

Table C-17. Conversion of Unit Code to Measurement Unit

Unit code	Measurement unit	Unit code	Measurement unit
Volume		**Length**	
40	US Gallon	44	Feet
41	Liters	45	Meters
42	Imperial Gallons	47	Inches
43	Cubic Meters	48	Centimeters
46	Barrels	49	Millimeters
111	Cubic Yards	**Temperature**	
112	Cubic Feet	33	Degree Fahrenheit
113	Cubic Inches	32	Degree Celsius

C.11 Specific Modbus host configuration

The Remote Terminal Unit needs to be configured to communicate and correctly interpret data when reading input registers from the Rosemount 3300 Series Transmitter.

Baud rate

The specified baud rates below are recommendations. If other baud rates are used, make sure that the Rosemount 3300 Series Transmitter and the RTU are configured for the same communication speed.

Floating Point Format Code

See "Common Modbus host configuration" on page 195.

RTU Data Type

The RTU Data Type specifies which configuration to use in the RTU in order for the RTU to correctly interpret a floating point number transmitted from the Rosemount 3300 Series Transmitter with Modbus.

Input Register Base Number

Data registers in the Rosemount 3300 Series Transmitter with Modbus are numbered exactly as they are transmitted in the Modbus communication. Some RTUs use different naming conventions and to configure the RTU to poll the correct registers from the 3300 Modbus, an Input Register Base Number is stated for each RTU respectively. For example, if the input register base number is 1 for the RTU, the 3300 Modbus input register 1302 has to be entered in the RTU address as input register 1303.

C.11.1 Emerson Process Management ROC800 Series

Figure C-8. Wiring Diagram for Connecting 3300 Modbus to Emerson Process Management ROC800 Series

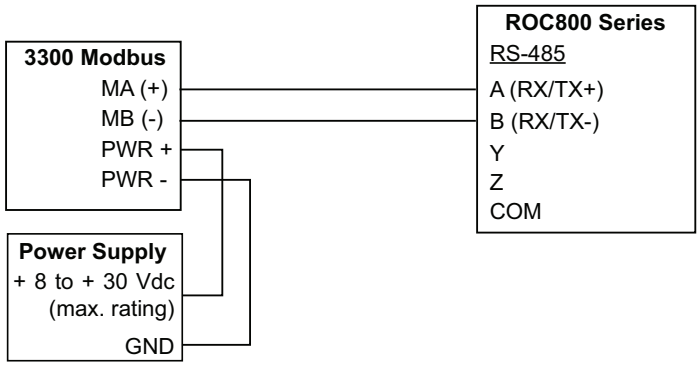

Table C-18. Parameter Values (in case of Emerson Process Management ROC800 Series)

Parameter	Value
Baud Rate	9600
Floating Point Format Code	0
RTU Data Type	Conversion Code 66
Input Register Base Number	0

The Input Register Base Number needs to be added to the Input Register address of the Rosemount 3300 Series Transmitter. In this case, register 1300 needs to have 1300 entered as the address.

C.11.2 Emerson Process Management FloBoss 107

Figure C-9. Wiring Diagram for Connecting 3300 Modbus to Emerson Process Management FloBoss 107

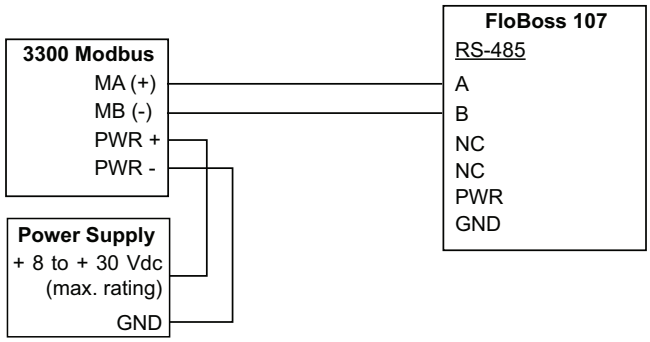

Table C-19. Parameter Values (in case of Emerson Process Management FloBoss 107)

Parameter	Value
Baud Rate	9600
Floating Point Format Code	0
RTU Data Type	Conversion Code 66
Input Register Base Number	0

The Input Register Base Number needs to be added to the Input Register address of the Rosemount 3300 Series Transmitter. In this case, register 1300 needs to have 1300 entered as the address.

C.11.3 ABB TotalFlow

Figure C-10. Wiring Diagram for Connecting 3300 Modbus to ABB TotalFlow

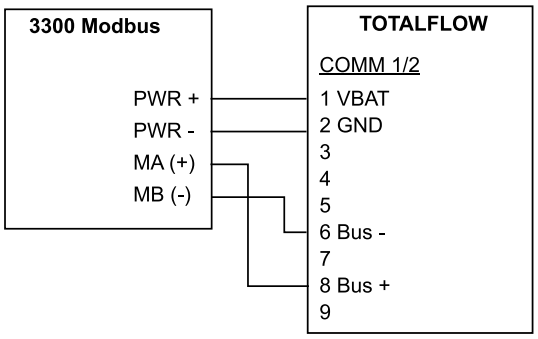

Table C-20. Parameter Values (in case of ABB TotalFlow)

Parameter	Value
Baud Rate	9600
Floating Point Format Code	0
RTU Data Type	16 Bit Modicon
Input Register Base Number	1

The Input Register Base Number needs to be added to the Input Register address of the Rosemount 3300 Series Transmitter. In this case, register 1302 needs to have 1303 entered as the address etc.

C.11.4 Thermo Electron Autopilot

Figure C-11. Wiring Diagram for Connecting 3300 Modbus to Thermo Electron Autopilot

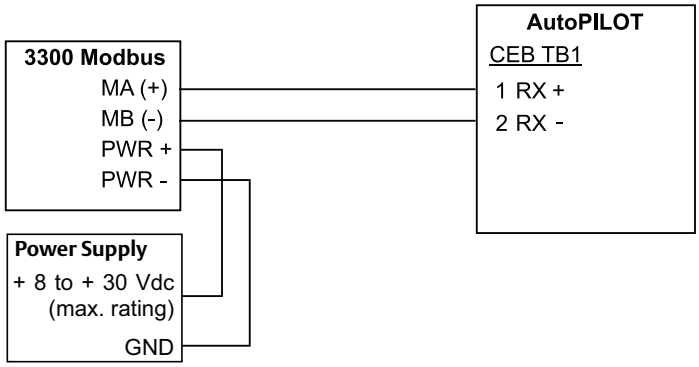

Table C-21. Parameter Values (in case of Thermo Electron Autopilot)

Parameter	Value
Baud Rate	9600
Floating Point Format Code	1
RTU Data Type	IEEE Flt 2R
Input Register Base Number	0

The Input Register Base Number needs to be added to the Input Register address of the Rosemount 3300 Series Transmitter. In this case, register 1302 needs to have 1302 entered as the address etc.

C.11.5 Bristol ControlWave Micro

Figure C-12. Wiring Diagram for Connecting 3300 Modbus to Bristol ControlWave Micro

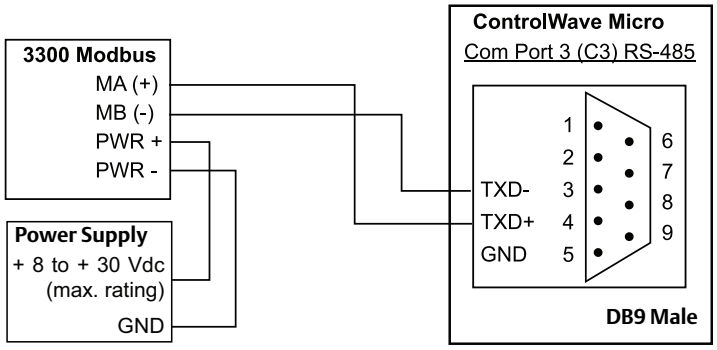

Table C-22. Parameter Values (in case of Bristol ControlWave Micro)

Parameter	Value
Baud Rate	9600
Floating Point Format Code	2 (FC 4)
RTU Data Type	32-bit registers as 2 16-bit registers
Input Register Base Number	1

The Input Register Base Number needs to be added to the Input Register address of the Rosemount 3300 Series Transmitter. In this case, register 1302 needs to have 1303 entered as the address etc.

C.11.6 ScadaPack

Figure C-13. Wiring Diagram for Connecting 3300 Modbus to SCADAPack 32

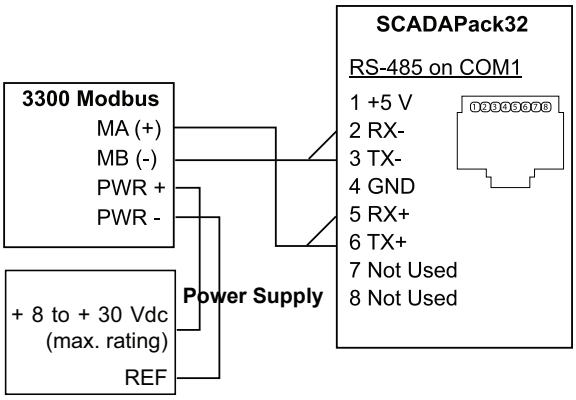

Table C-23. Parameter Values (in case of SCADAPack 32)

Parameter	Value
Baud Rate	9600
Floating Point Format Code	0
RTU Data Type	Floating Point
Input Register Base Number	30001

The Input Register Base Number needs to be added to the Input Register address of the Rosemount 3300 Series Transmitter. In this case, register 1302 needs to have 31303 entered as the address etc.

C.11.7 Kimray DACC 2000/3000

This table shows input types in Kimray IMI software and the corresponding value. The communication port must be configured to use “Tank Levels” protocol.

Table C-24. Kimray Input Types and Corresponding Values

Kimray Inp type	3300 variable	Format
Tank Level1	PV	ddd.dd.alt. -dd.dd
Tank Level2	SV	ddd.dd.alt -dd.dd

C.12 Troubleshooting

No communication on RS-485 bus (MA (+), MB (-))

- Check that the cables are connected
- Check that PWR+ is connected to + and PWR- is connected to - on the power supply
- Make sure the 3300 transmitter is supplied with 8-30 Vdc (max. rating)
- Try alternating MA (+)/MB (-)if you are unsure of the polarity
- If an RS-485 converter is used, make sure it is properly installed and configured
- The last 3300 transmitter may need a terminating 120-Ω resistor connected between MA (+) and MB (-)

No 3300 communication in RCT

- Using HART+, HART-
  - HART modem is not properly connected
  - Polling address is incorrect in RCT (default 1)
- Using MA (+), MB (-)
  - See *No communication on RS-485 bus*
  - Polling address is incorrect in RCT (default 1)
  - Cycle the power and wait 20 seconds before polling

No communication with Modbus RTU protocol

- See *No communication on RS-485 bus*
- Make sure the "Modbus communication protocol configuration" on page 186 is done properly
- Make sure the Modbus RTU address is unique on the bus
- Cycle the power and try to connect
- Check the RTU communication settings

No communication with Modbus ASCII protocol

- See *No communication on RS-485 bus*
- Make sure the "Modbus communication protocol configuration" on page 186 is done properly
- Make sure the Modbus ASCII address is unique on the bus
- Cycle the power, waiting 40 seconds before communication begins
- Check the RTU communication settings

No communication with Levelmaster protocol

- See *No communication on RS-485 bus*
- Make sure the "Modbus communication protocol configuration" on page 186 is done properly
- Make sure the Levelmaster address is unique on the bus
- Cycle the power, waiting 40 seconds before communication begins
- Check the RTU communication settings

C.13 HMC Firmware Upgrade in Rosemount Radar Master

The HMC firmware is upgraded using Rosemount Radar Master (RRM). A detailed description on how to carry out the firmware upgrade is shown on the following pages.

Note
All settings in the HMC will be lost after upgrading the transmitter. Reconfiguration of Modbus communication setup and alarm handling is required after completing the upgrade.

Note
During firmware upgrade, the HMC Modbus RTU address must be 246, the default address. Make sure to disconnect other Modbus RTU devices that are connected and have address 246.

Note
Do not interrupt communication between the PC and the 3300 level transmitter during the firmware upload.

1. Start Rosemount Radar Master (RRM).
2. Enable Modbus communication and set communication preferences.
   a. Select **View** > **Communication Preferences**.
   b. In the **Modbus** tab, select the **Enable Modbus Communication** check-box.
   c. In the *Port* list, select the COM port number that the RS-485 Converter is connected to.
   d. Click **Advanced** and use the following settings:
      - Modem: RS-485
      - Baudrate: According to configuration in HMC (default 9600)
      - Stop Bits: According to configuration in HMC (default 1)
      - Parity: According to configuration in HMC (default None)
      - Handshake: RTS/CTS
      - Response Timeout: 1000 ms
      - Retries: 3
3. Select **OK**.

4. Search for and connect to device.

   a. Select **Device** > **Search** to open the *Search Device* window.

      If the HMC is configured for Modbus ASCII or Levelmaster communication, cycle the power to the transmitter and then open the *Search Device* window. (The HMC will then communicate using Modbus RTU for 20 seconds and under that time it is possible to connect with RRM.)

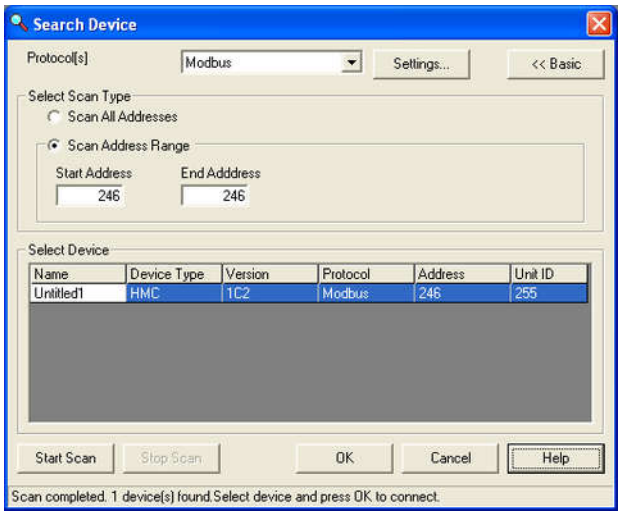

   b. In the *Protocol(s)* list, make sure **Modbus** is selected.

   c. Select **Scan Address Range**, and type a start and end address for HMC Modbus. The default HMC Modbus address is 246.

   d. Select **Start Scan**.

   e. Select **OK** to connect when the device is found.

5. Make sure the HMC Modbus address is set to 246 (the default address).

   a. Select **Setup** > **General**.

   b. In the *Device Address* box, type 246 and select **Store**.

6. Enter service mode.

   a. Select **Service** > **Enter Service Mode**.

   b. Type the password “admin”.

   c. Select **Submit**.

7. Upload HMC firmware to device.
   a. Select **Service** > **Upload Firmware**.
   b. Select **Browse** and navigate to the folder containing the HMC firmware file.
   c. Select the *.cry file, and select **Open**.

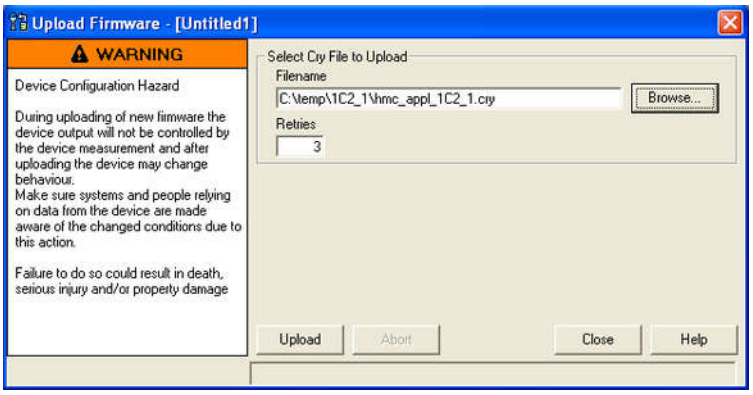

8. When upload is finished, select **Tools** > **Diagnostics**.

9. Select **Device Errors** and check for “Checksum”.

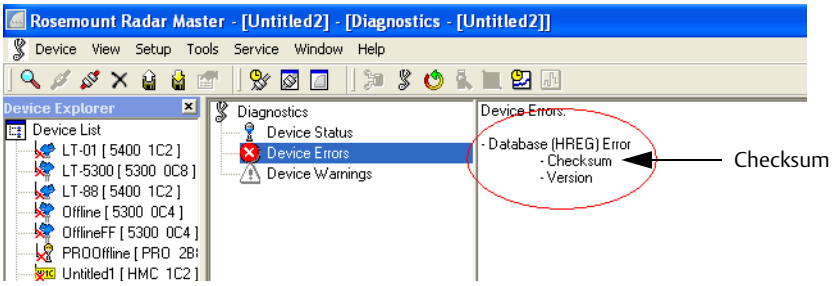

10. If “Checksum” is on the list, do the following:
    a. Select **Tools** > **Factory Settings**.
    b. Select **All** and then select **OK**.

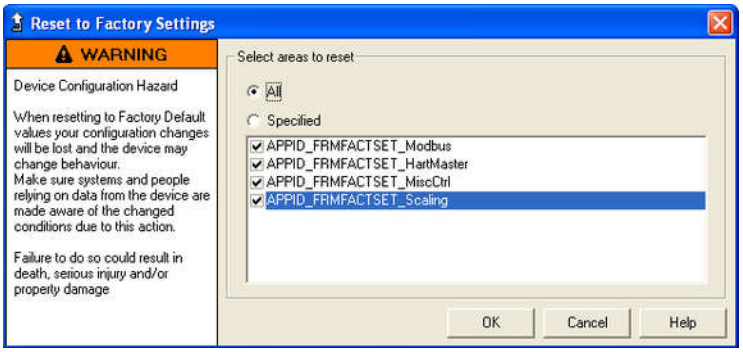

    c. Select **Yes**.

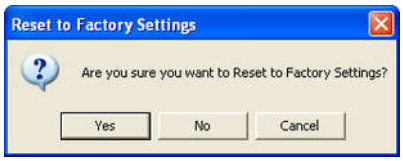

Note
An error message might be displayed when performing the Reset to Factory Settings operation. The operation has been successful if the checksum error has been cleared.

d. Select **Tools** > **Restart Device**.
e. Select **Tools** > **Diagnostics**, and then select **Device Errors** to verify that the "Checksum" error is no longer present. If it is still present, follow the steps f to j.
f. Select **Service** > **View Holding Registers**.
g. Select **Numbers**.
h. In the *Start Register* box, type **65510**, and then select **Read**.
i. Type the value **16760** to register 65510 and select **Store**.

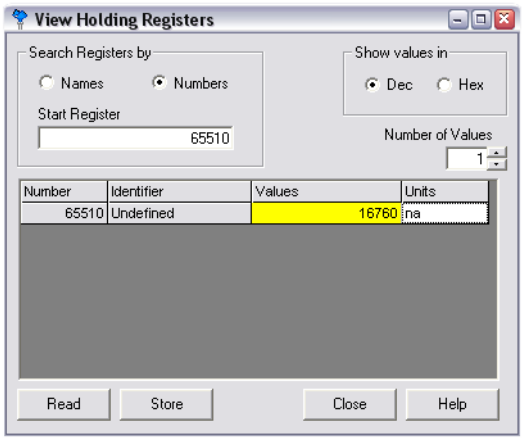

j. Select **Tools** > **Restart Device**.

11. If the HMC is configured for Modbus ASCII or Levelmaster communication after upload has been completed, proceed with the following:
    a. Close RRM and disconnect the RS-485 converter from the HMC.
    b. Cycle the power to the HMC to have it exit Modbus RTU communication mode.

C.14 Specifications

Table C-25. Specifications

Power supply	8-30 Vdc (max. rating)
Power consumption	< 0.5 W (with HART address=1) < 1.2 W (incl. four HART slaves)
Signal wiring	Two-wire half duplex RS-485 Modbus. Use shielded twisted pair wiring, preferably with an impedance of 120Ω (typically 24 AWG), in order to comply with EIA-485 standard and EMC regulations.
Power supply cabling	The power supply cables must be suitable for the supply voltage and ambient temperature, and approved for use in hazardous areas, where applicable.
Ground (common mode) voltage limit	± 7 V
Bus termination	Standard RS-485 bus termination per EIA-485

Index

Numerics

20 mA point 64, 73
4 and 20 mA points 73
4 mA point 64, 80
751 Field Signal Indicator 60

A

Agitators 13, 28
Alarm switch 21
Amplitude threshold settings 104
Amplitude thresholds 95
AMS Suite 10
Analog output saturation values 20
Analog output calibration 100
Anchoring 36
Applications 8
Approval drawings 172

B

Bridging 11
BSP/G threads 31
Burst mode 87, 89
Burst option 88

C

Cable selection 53
Cable/conduit entries 52
Calibration 100, 101
Calibration offset 94
Canadian Standards Association
    approval 162
    system control drawing 174
Centering disc 24, 49, 139
Centering piece 35
Changing the probe 111
Coating 11
COM Port 75
COM Port Buffers 89
Configuration 61
    basic 69
    volume 64, 74
Current loop resistance 53

D

Damping 72, 80, 98
Device ID 79
Device name 79
Device revision 68
Device type 79
Diagnostic messages 112, 113
Dielectric chart 71
Dielectric constant
    upper product 63
    vapor 63
Dielectric constant 12, 71, 83
Dielectric constant calculator 12
Disk logging 96
Display
    alarm 92
    write protection 92
Display panel 72, 91
Disturbances
    Upper Null Zone 102

E

Electrical installation 52
    connecting the transmitter 55
    intrinsically safe output 57
    non-intrinsically safe output 56
    Tri-Loop 58, 87
Emulsion layers 13
EPROM ID 79
Errors 92, 113
European ATEX Directive Information 163

F

Factory Mutual
    approval 161
    system control drawing 173
Field Communicator 67, 106
Flange connection 23
Foam 11
Free space 26

G

Grounding 52

H

Hardware Rev 79
HART communicator 67
Hazardous locations certifications 161
Heating coils 13, 27
High level rates 98

I

Immersed Probe 99

Installation
cable selection . . . 53
cable/conduit entries . . . 52
flange connection . . . 23
free space . . . 26
grounding . . . 52
mounting considerations . . . 22
mounting position . . . 27
power requirements . . . 53
procedure . . . 19
shortening the probe . . . 33
still pipes . . . 24
threaded connection . . . 22
Installation Wizard . . . 76
Integral display . . . 91
Interface . . . 12
fully immersed probes . . . 99
low dielectric constants . . . 96
Interface immersed probe . . . 72

L

LCD . . . 85
Level and distance calibration . . . 101
Logging . . . 96, 107
Loop-powered transmitter . . . 10
Lower Range Value (LRV) . . . 73
Lower transition zone . . . 16

M

Maximum load resistance . . . 54, 118
Maximum upper product thickness . . . 13, 72
Measurement mode . . . 71, 82
Measurement principle . . . 7
Measurement units . . . 70, 79
Measuring range . . . 11
Memory map . . . 109
Mounting position . . . 27
Multidrop connection . . . 59
Multidrop mode . . . 59

N

NAMUR-compliant alarm . . . 20
Non-metallic tanks . . . 24
Nozzle
maximum height . . . 23
minimum diameter . . . 23
NPT threads . . . 31

O

OSHA . . . 5

P

Pipe installations
centering disc . . . 49
Plate design . . . 30, 124
Poll address . . . 59
Power requirements . . . 53
Power supply . . . 117, 120
Primary Variable (PV) . . . 69
Probe
anchoring . . . 36
changing . . . 111
shortening . . . 33
Probe angle . . . 64, 72
Probe length . . . 62, 63, 70
Probe type . . . 14, 63, 70
Process connection . . . 22
Product dielectric . . . 71

R

Radar Configuration Tool (RCT) . . . 10, 75
Range values . . . 73
RCT . . . 75
COM Port . . . 75
installing . . . 75
logging . . . 96
saving the configuration . . . 108
setup . . . 78
waveform plot . . . 95
Wizard . . . 76
Receive buffer . . . 87
Recommended mounting position . . . 27
Reference gauge height . . . 62, 63, 70, 94
RHCS Server . . . 76
Rosemount 751 Field Signal Indicator . . . 10

S

Save Setup . . . 108
Set poll address . . . 59
Setup
Basics . . . 79
LCD . . . 85
Output . . . 80
Save configuration . . . 108
Tank Config . . . 81
Volume . . . 84
Software Rev . . . 79
Spacers . . . 34, 35
Standard tank shapes . . . 66
Strapping table . . . 65, 74
System architecture . . . 10

T

Tank connection . . . 29, 30
flange . . . 29
threaded . . . 31

Tank dimensions 74
Tank geometry 62, 94
Tank shape 14, 66
Tank type 64, 74
Threaded connection 22
Threshold settings 97
Time Domain Reflectometry (TDR) 7
Transfer buffer 89
Transition zones 16
Transmitter head removing 110
Transmitter housing 14
Transmitter reference point 94
Transmitter variables 69, 74
Tri-Loop 58, 87
Trim Near Zone 102
Troubleshooting 93
Turbulent conditions 28

U

Upper Null Zone (UNZ) 23, 64, 82, 102, 103
Upper Range Value (URV). 73, 80
Upper reference point 16, 62, 94
Upper Transition Zone 16, 73

V

Vapor 11
Vapor dielectric 71
Vessel characteristics 13
Volume configuration 64, 74
Volume units 74

W

Warnings 114
Waveform plot 95
Write protect switch 21
Write protection 20, 92

Reference Manual
00809-0100-4811, Rev DA
January 2015

Emerson Process Management
Rosemount Measurement
8200 Market Boulevard
Chanhassen, MN 55317 USA
Tel (USA) 1 800 999 9307
Tel (International) +1 952 906 8888
Fax +1 952 906 8889

Emerson Process Management
Blegistrasse 23
P.O. Box 1046
CH 6341 Baar
Switzerland
Tel +41 (0) 41 768 6111
Fax +41 (0) 41 768 6300

Emerson FZE
P.O. Box 17033
Jebel Ali Free Zone
Dubai UAE
Tel +971 4 811 8100
Fax +971 4 886 5465

Emerson Process Management
Asia Pacific Pte Ltd
1 Pandan Crescent
Singapore 128461
Tel +65 6777 8211
Fax +65 6777 0947
Service Support Hotline: +65 6770 8711
Email: Enquiries@AP.EmersonProcess.com

Emerson Process Management
Latin America
1300 Concord Terrace, Suite 400
Sunrise, Florida 33323 USA
Tel +1 954 846 5030

Emerson Beijing Instrument Co
No.6 North Street, Hepingli
Dongcheng District, Beijing
100013
China
Tel +8610 64282233
Fax +8610 642 87640

Standard Terms and Conditions of Sale can be found at www.rosemount.com/terms_of_sale.
The Emerson logo is a trademark and service mark of Emerson Electric Co.
AMS, Rosemount, and the Rosemount logotype are registered trademarks of Rosemount Inc.
DeltaV, THUM, Tri-Clamp, and Tri-Loop are trademarks of Rosemount Inc.
HART and WirelessHART are registered trademarks of the HART Communication Foundation.
Modbus is a registered trademark of Modicon, Inc.
Viton and Kalrez are registered trademarks of DuPont Performance Elastomers.
Microsoft is a registered trademark of Microsoft Corporation in the United States and other countries.
Windows is a trademark of Microsoft Corporation in the United States and other countries.
FDT is a registered trademark of the FDT group.
DTM is a trademark of the FDT group.
PACTware is a trademark of PACTware Consortium.
NACE is a registered trademark of NACE International.
Bristol, ControlWave, and FloBoss are trademarks of Remote Automation Solutions, a subsidiary of Emerson Process Management.
E+H FieldCare is a trademark of Endress + Hauser AG.
All other marks are the property of their respective owners.

© January 2015 Rosemount, Inc. All rights reserved.

ROSEMOUNT

EMERSON.
Process Management