PN7572

Pressure sensor with display

PN-100-SEG14-QFRKG/US/ /V

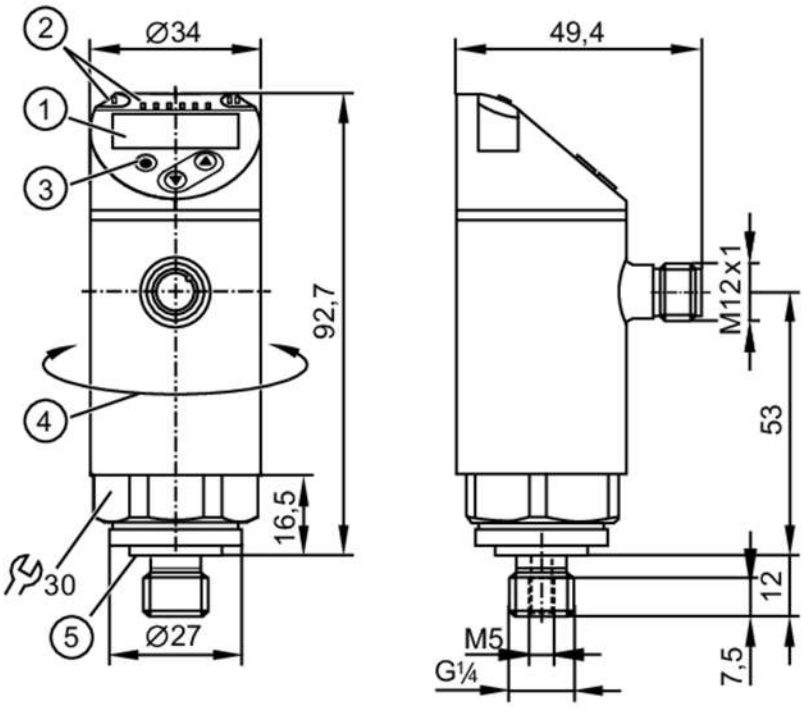

1 alphanumeric display 4-digit red/green
2 LEDs Display unit / switching status
3 programming button
4 upper part of the housing can be rotated 345°
5 Sealing

Product characteristics			
Number of inputs and outputs	Number of digital outputs: 2		
Measuring range	0...100 bar	0...1450 psi	0...10 MPa
Process connection	threaded connection G 1/4 external thread internal thread:M5		
Application			
Special feature	Gold-plated contacts		
Measuring element	metallic thin film cell		
Application	for industrial applications		
Media	Liquids		
Medium temperature [°C]	-25...80		
Min. bursting pressure	1000 bar	14500 psi	100 MPa
Pressure rating	300 bar	4350 psi	30 MPa
Type of pressure	relative pressure		
Electrical data			
Operating voltage [V]	18...30 DC; (to SELV/PELV)		
Current consumption [mA]	< 35		
Min. insulation resistance [MΩ]	100; (500 V DC)		
Protection class	III		
Reverse polarity protection	yes		
Power-on delay time [s]	0.3		

PN7572

Pressure sensor with display

PN-100-SEG14-QFRKG/US/ /V

Integrated watchdog	yes		
Inputs / outputs			
Number of inputs and outputs	Number of digital outputs: 2		
Outputs			
Total number of outputs	2		
Output signal	switching signal; IO-Link; (configurable)		
Electrical design	PNP/NPN		
Number of digital outputs	2		
Output function	normally open / normally closed; (parameterisable)		
Max. voltage drop switching output DC [V]	2.5		
Permanent current rating of switching output DC [mA]	150; (200 (...60 °C) 250 (...40 °C))		
Switching frequency DC [Hz]	< 170		
Short-circuit protection	yes		
Type of short-circuit protection	pulsed		
Overload protection	yes		
Measuring/setting range			
Measuring range	0...100 bar	0...1450 psi	0...10 MPa
Factory setting / CMPT = 2			
Set point SP	1...100 bar	10...1450 psi	0.1...10 MPa
Reset point rP	0.5...99.5 bar	5...1445 psi	0.05...9.95 MPa
Min. difference between SP and rP	0.5 bar	10 psi	0.05 MPa
In steps of	0.5 bar	5 psi	0.05 MPa
Status_B High Resolution / CMPT = 3			
Set point SP	0.8...100 bar	12...1450 psi	0.08...10 MPa
Reset point rP	0.3...99.5 bar	5...1443 psi	0.03...9.95 MPa
Min. difference between SP and rP	0.5 bar	8 psi	0.05 MPa
In steps of	0.1 bar	1 psi	0.01 MPa
Accuracy / deviations			
Switch point accuracy [% of the span]	< ± 0,5		
Repeatability [% of the span]	< ± 0,1; (with temperature fluctuations < 10 K)		
Characteristics deviation [% of the span]	< ± 0,25 (BFSL) / < ± 0,5 (LS); (BFSL = Best Fit Straight Line; LS = limit value setting)		
Hysteresis deviation [% of the span]	< ± 0,25		
Long-term stability [% of the span]	< ± 0,05; (per 6 months)		
Temperature coefficient zero point [% of the span / 10 K]	0,2; (-25...80 °C)		
Temperature coefficient span [% of the span / 10 K]	0,2; (-25...80 °C)		

PN7572

Pressure sensor with display

PN-100-SEG14-QFRKG/US/ /V

Response times			
Response time	[ms]	< 3	
Delay time programmable dS, dr	[s]	0...50	
Software / programming			
Parameter setting options		hysteresis / window; normally open / normally closed; switching logic; switch-on/switch-off delay; Damping; Display unit	
Interfaces			
Communication interface		IO-Link	
Transmission type		COM2 (38,4 kBaud)	
IO-Link revision		1.1	
SDCI standard		IEC 61131-9	
SIO mode		yes	
Required master port type		A; (when pin 2 not connected: B)	
Supported DeviceIDs		**Type of operation**	**DeviceID**
		Factory setting / CMPT = 2	401
		Status_B High Resolution / CMPT = 3	599
Note		For further information please see the IODD PDF file under "Downloads"	
Factory setting / CMPT = 2			
Profiles		Smart Sensor: Process Data Variable; Device Identification, Device Diagnosis	
Min. process cycle time	[ms]	2.3	
IO-Link resolution pressure		0.1 bar	0.01 MPa
IO-Link process data (cyclical)		**function**	**bit length**
		pressure	14
		binary switching information	2
IO-Link functions (acyclical)		application specific tag	
Status_B High Resolution / CMPT = 3			
Profiles		Smart Sensor ED2: Digital Measuring Sensor (0x000A), Identification and Diagnosis (0x4000)	
Min. process cycle time	[ms]	3	
IO-Link resolution pressure		0.05 bar	0.005 MPa
IO-Link process data (cyclical)		**function**	**bit length**
		pressure	16
		device status	4
		binary switching information	2
IO-Link functions (acyclical)		application specific tag	
Operating conditions			
Ambient temperature	[°C]	-25...80	
Storage temperature	[°C]	-40...100	
Protection		IP 65; IP 67	
Tests / approvals			
EMC		DIN EN 61000-6-2	
		DIN EN 61000-6-3	
Shock resistance		DIN EN 60068-2-27	50 g (11 ms)
Vibration resistance		DIN EN 60068-2-6	20 g (10...2000 Hz)
MTTF	[years]	214	

PN7572

Pressure sensor with display

PN-100-SEG14-QFRKG/US/ /V

UL approval		UL Approval no.	J002
Pressure Equipment Directive		Sound engineering practice; can be used for group 2 fluids; group 1 fluids on request	

Mechanical data

Weight	[g]	257
Materials		stainless steel (630/1.4542/17-4 PH); stainless steel (316L/1.4404); PBT+PC-GF30; PBT-GF20; PC
Materials (wetted parts)		stainless steel (630/1.4542/17-4 PH)
Min. pressure cycles		100 million
Tightening torque	[Nm]	25...35; (recommended tightening torque; depends on lubrication, seal and pressure rating)
Process connection		threaded connection G 1/4 external thread internal thread:M5
Restrictor element integrated		no (can be retrofitted)

Displays / operating elements

Display	Display unit	3 x LED, green (bar, psi, MPa)
	switching status	2 x LED, yellow
	measured values	alphanumeric display, red/green 4-digit

Remarks

Pack quantity	1 pcs.

Electrical connection

Connector: 1 x M12; coding: A; Contacts: gold-plated



PN7572

Pressure sensor with display

PN-100-SEG14-QFRKG/US/ /V

Connection

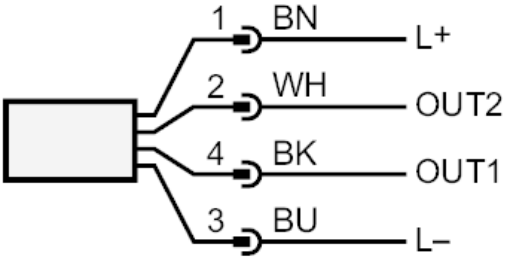

OUT1	switching output IO-Link
OUT2	switching output
	colours to DIN EN 60947-5-2
	Core colours :
BK =	black
BN =	brown
BU =	blue
WH =	white