TR 610 top2 110V UL | Article number: 6101100

Description



- Digital time switch with weekly program
- 1 channel
- DuoFix spring terminals
  - For 2 conductors each
  - Wire or strand (with or without wire end sleeve)
  - Wire diameter: 0.5 - 2.5 mm²
  - Button for releasing plug-in connection
- Text-oriented user guidance in display
  - Preset date and time
  - fully operable without mains connection
- 56 memory locations
- Interface for OBELISK top2 memory card (PC programming)
  - 2. insertable switching program
  - Copying programs
  - Storing programs
- 10 year power reserve (lithium battery)
- Zero-cross switching for relay-saving switching and high lamp loads (not with 24 V devices)
- ON-OFF switching times
- Switching preselection
- Permanent switching ON/OFF
- Integrated operating hour counter
  - Reset option
  - Service function for monitoring maintenance intervals
- Holiday program
- Display back light (can be turned off)
- Permanent switching ON/OFF
- PIN coding
- Automatic summer/winter time changeover
  - can be deactivated
  - Date rule options are already stored for Europe, the USA and other countries
  - own date rule options or changeover around set dates are available

Technical data

Operating voltage	115 – 120 V AC
Frequency	60 Hz
Width	2 modules
Installation type	DIN rail
Type of contact	Changeover contact
Switching output	Phase-independent
Opening width	< 3 mm
Program	Weekly program
Program functions	ON-OFF
Number of channels	1
Number of memory locations	56
Power reserve	10 years
Switching capacity at 250 V AC, cos φ = 1	8 A
Switching capacity at 250 V AC, cos φ = 0,6	5 A
Incandescent/halogen lamp load 230 V	960 W
Energy saving lamps 230 V	11 x 7 W, 9 x 11 W, 8 x 15 W, 8 x 20 W, 7 x 23 W

Fluorescent lamp load (conventional) series-corrected	960 VA
Fluorescent lamp load (conventional) parallel-corrected	350 VA 80 µF
Switching capacity min.	<10 mA
Shortest switching times	1 min
Time accuracy at 25 °C	typical ± 0,25 s/day (quartz)
Time basis	Quartz
Stand-by consumption	~0,6 W
Memory card supplied	–
Type of connection	DuoFix spring terminals
Keyboards	4 touch buttons
Housing and insulation material	High-temperature resistant, self-extinguishing thermoplastic
Type of protection	IP 20
Protection class	II according to EN 60 730-1
Ambient temperature	-30 °C … +25 °C

Scale drawings

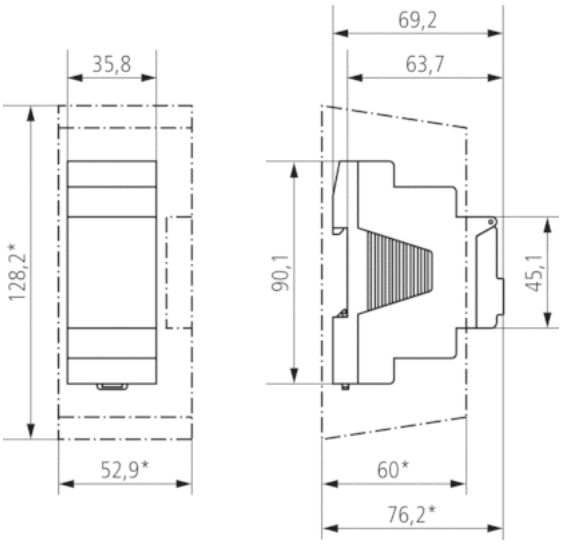

Accessories

Wall mounting kit 35 mm

- Article number: 9070064
  Details ▸ www.theben.de



PC set OBELISK top2

- Article number: 9070409
  Details ▸ www.theben.de



Memory card OBELISK top2

- Article number: 9070404
  Details ▸ www.theben.de



Front panel kit

- Article number: 9070001
  Details ▸ www.theben.de

