EX-MANUAL MOTOR STARTERS

Up to 25 A

Motors have to be protected against overloads, phase failures and overheating: CEAG's power circuit breaker and manual motor starter features phase-failure protection as well as thermal and electromagnetic tripping for reliable motor protection.

5

An optional under-voltage trip or auxiliary contact complements the safety package. The switch position is always indicated by the switch handle – practically excluding wrong operation.

A special safety feature offered by the manual motor starter: It can only be switched on on-site – where the drive is. An operating-current trip for remote switch-off is optional.
CEAG manual motor starters have such a precise tripping time that they are equally suited for the protection of Ex-e as well as Ex-d motors – just to put you on the safe side.

Internationally approved.





- **Full AC-3 motor switching capacity**
- **Decisive cost savings with CEAG's mounting system**
- **Easily accessible connection terminals**
- **High degree of protection IP66**
- **Isolating properties according to DIN EN 60947-4-1**
- **Clear indication of switch position**
- **Phase-failure protection**
- **Integrated locking facility**



GHG 635 (25 A)

Technical data

Ex-manual motor starter GHG 635 (25 A)		
Marking accd. to 94/9/EC		Ⓔx II 2 G Ex ed IIC T5/T6 / Ⓔx II 2 D Ex tD A21 IP66 T80 °C
EC-Type Examination Certificate		PTB 99 ATEX 1162
IECEx Certificate of Conformity		IECEx BKI 08.0014
Marking accd. to IECEx		Ex d IIC T6/ Ex tD A21 IP66 T80 °C
Permissible ambient temperature		
	at T6 Ie ≤ 16 A	–20 °C up to +40 °C
	at T5 Ie > 16 A; ≤ 25 A	–20 °C up to +55 °C
Rated voltage		up to max. 690 V
Rated current		max. 25 A
Rated current aux. contact		max. 2 A
Frequency		50/60 Hz
Rated making/breaking capacity AC-3 accd. EN 60947-4-1		U_e 690 V / I_e 25 A
Back-up fuse		see table
Undervoltage trip		tripping at 15 % - 75 % Un can be switched on at U > 80 % Uc
Connecting terminals	main contact	10 mm²
	auxiliary-/Signal contact	2 x 0.75 - 4.0 mm²
Thermal tripping characteristic		T II
Protection class		I
Degree of protection accd. to EN 60529		IP66
Cable glands/enclosure drilling		
	0.1 - 6.3 A	2 x M25 (d = 8 - 17 mm) [1]
	6.3 - 25 A	2 x M32 (d = 12 - 21 mm) [1], optional metal flange with thread
Weight		2.5 kg
Enclosure material		glass-fibre reinforced polyester
Enclosure colour		black
Padlocking facility		can be locked in OFF position with 3 commercially available padlocks (Ø max. 6 mm)

[1] Version with aux. contact or under voltage trip with additional cable gland M25



GHG 635 (25 A)

Ordering coding for special version

Description	Content	Undervoltage trip	Aux. contact	
GHG 635 1	**A**	**B**	**C**	**R...**

Coding					
A	Content	1	=	Standard version	
B	Undervoltage trip	0	=	without undervoltage trip	
		1	=	undervoltage trip	230 V
		2	=	undervoltage trip	400 V
		3	=	undervoltage trip	440 V
		4	=	undervoltage trip	500 V
		5	=	undervoltage trip	24 V
		6	=	undervoltage trip	48 V
		7	=	undervoltage trip	60 V
		8	=	undervoltage trip	110 V
		9	=	undervoltage trip	415 V
C	Auxiliary contact	1	=	without aux. contact	
		2	=	with aux. contact 1 NO + 1 NC	
		3	=	with aux. contact 2 NO	

Short-circuit protection up to 100 kA and maximum backup fuse

Setting range	230 V AC		400 V AC		500 V AC		690 V AC		Temp.-	Order No.
	Ics	gL, aM	Ics	gL, aM	Ics	gL, aM	Ics	gL, aM	Class	A B C R...
0.1 A ... 0.16 A									T6	**GHG 635 1 1 0 1 R0101**
0.16 A ... 0.25 A									T6	**GHG 635 1 1 0 1 R0102**
0.25 A ... 0.40 A			short-circuit						T6	**GHG 635 1 1 0 1 R0103**
0.40 A ... 0.63 A			no backup-fuse						T6	**GHG 635 1 1 0 1 R0104**
0.63 A ... 1.0 A			required						T6	**GHG 635 1 1 0 1 R0105**
1.0 A ... 1.6 A									T6	**GHG 635 1 1 0 1 R0106**
1.6 A ... 2.5 A							40 kA	25 A	T6	**GHG 635 1 1 0 1 R0107**
2.5 A ... 4.0 A					40 kA	35/40 A	10 kA	40 A	T6	**GHG 635 1 1 0 1 R0108**
4.0 A ... 6.3 A					30 kA	50 A	3 kA	40 A	T6	**GHG 635 1 1 0 1 R0109**
6.3 A ... 9.0 A					30 kA	80 A	3 kA	50 A	T6	**GHG 635 1 1 0 1 R0110**
9.0 A ... 12.5 A			50 kA	80 A	20 kA	80 A	3 kA	50 A	T6	**GHG 635 1 1 0 1 R0111**
12.5 A ... 16.0 A			50 kA	100 A	20 kA	100 A	3 kA	50 A	T6	**GHG 635 1 1 0 1 R0112**
16.0 A ... 20.0 A			50 kA	100 A	20 kA	100 A	2 kA	50 A	T5	**GHG 635 1 1 0 1 R0113**
20.0 A ... 25.0 A	50 kA	125 A	50 kA	125 A	20 kA	125 A	2 kA	50 A	T5	**GHG 635 1 1 0 1 R0114**

Customized version on request



GHG 635 (25 A)

Accessories

Mounting plate for Ex-Main current switches 25 A

Type	Application	Fixing method	Order No.
Size 3	Wall mounting	screwless mounting	**GHG 610 1953 R0118**
Size 3	Pipe clamp	screwless mounting	**GHG 610 1953 R0110**
Size 3	Trellis-work mounting	screwless mounting	**GHG 610 1953 R0118**

Accessories for mounting plates

Type	OU	Order No.
Label holder with type label (blank) for mounting plate size 1, 2, 2A and 3	10	**GHG 610 1953 R0057**
Mounting set for pipes 1" (of 27 - 30 mm) for mounting plates with pipe fixing	10	**GHG 610 1953 R0020**

Protective canopy for mounting plate

Type	Application	OU	Order No.
Size 3	for pipe mounting plate size 3 vertical	1	**GHG 610 1955 R0104**
Size 3A	for mounting plates wall/trellis fixing size 3 vertical	1	**GHG 610 1955 R0105**
Size 3B	for mounting plates pipe fixing size 3 horizontal	1	**GHG 610 1955 R0106**

Please pay attention that only order units (OU) according to the ordering details can be delivered.

Dimension drawing | Wiring diagram

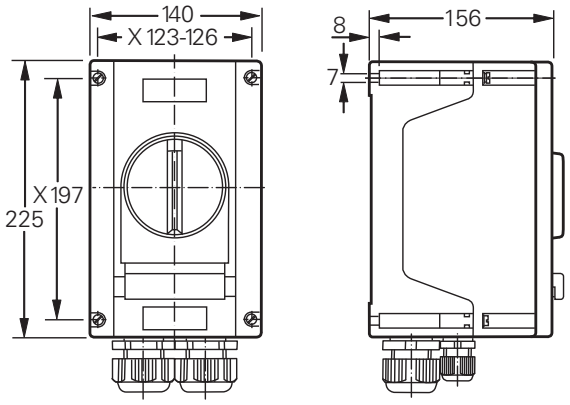

GHG 635

X = fixing dimensions

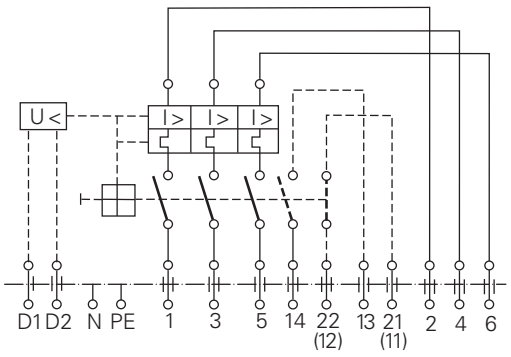

Dimensions in mm



GHG 635-12



Panel mounting

Technical data

5

Ex-manual motor starter GHG 635-12	
Marking accd. to 94/9/EC	Ⓔx II 2 G Ex d IIC T6 / Ⓔx II 2 D Ex tD A21 IP66 T80 °C
EC-Type Examination Certificate	PTB 05 ATEX 1020
Permissible ambient temperature	–20 °C up to +40 °C
Rated voltage	up to max. 690 V
Rated current	0.1 up to 16 A
Frequency	50/60 Hz
Rated making/breaking capacity AC-3	
accd. EN 60947-3-4-1	U_e 650 V / I_e 16 A
Rated voltage undervoltage trip	400 V 50/60 Hz (Standard version)
	440 V / 500 V / 24 V / 48 V / 60 V on request
	tripping at 35 % – 70 % Uc
Undervoltage trip	can be switched on at U > 85 % Uc
Back-up fuse	up to 400 V AC short circuit proof up to 50 kA up to 6.3 A; 30 kA up to 16 A
Thermal tripping characteristic	T II
Protection class	I
Degree of protection accd. to EN 60529	IP66
Connecting cable	H07RN-F (standard 3 m, other length on request)
Weight	1 kg (without cable)
Enclosure material	glass-fibre reinforced polyamide
Enclosure colour	black
Padlocking facility	can be locked in OFF position with 3 commercially available padlocks (Ø max. 6 mm)

Short-circuit protection up to 100 kA and maximum backup fuse

Setting range	240 V AC		400 V AC		500 V AC		690 V AC	
	Ics	gL, aM	Ics	gL, aM	Ics	gL, aM	Ics	gL, aM
0.1 A ... 0.16 A	short-circuit no backup-fuse required up to I_{cc} = 50 A							
0.16 A ... 0.25 A								
0.25 A ... 0.40 A								
0.40 A ... 0.63 A								
0.63 A ... 1.0 A								
1.0 A ... 1.6 A								
1.6 A ... 2.5 A							40 kA	25 A
2.5 A ... 4.0 A							10 kA	40 A
4.0 A ... 6.3 A					40 kA	50 A	7 kA	40 A
6.3 A ... 9.0 A					30 kA	80 A	5 kA	50 A
9.0 A ... 12.5 A					27 kA	80 A	4.5 kA	50 A
12.5 A ... 16.0 A					25 kA	100 A	4 kA	50 A


Panel mounting


with mounting plate


GHG 635-12

Ordering details

Setting range	undervoltage trip	Cord length	Order No.
Ex-manual motor starter GHG 635-12			
0.1 - 0.16 A	no	2 x 3 m	**GHG 635 1200 R0001**
	400 V	2 x 3 m	**GHG 635 1220 R0001**
0.16 - 0.25 A	no	2 x 3 m	**GHG 635 1200 R0002**
	400 V	2 x 3 m	**GHG 635 1220 R0002**
0.25 - 0.40 A	no	2 x 3 m	**GHG 635 1200 R0003**
	400 V	2 x 3 m	**GHG 635 1220 R0003**
0.40 - 0.63 A	no	2 x 3 m	**GHG 635 1200 R0004**
	400 V	2 x 3 m	**GHG 635 1220 R0004**
0.63 - 1.0 A	no	2 x 3 m	**GHG 635 1200 R0005**
	400 V	2 x 3 m	**GHG 635 1220 R0005**
1.0 - 1.6 A	no	2 x 3 m	**GHG 635 1200 R0006**
	400 V	2 x 3 m	**GHG 635 1220 R0006**
1.6 - 2.5 A	no	2 x 3 m	**GHG 635 1200 R0007**
	400 V	2 x 3 m	**GHG 635 1220 R0007**
2.5 - 4.0 A	no	2 x 3 m	**GHG 635 1200 R0008**
	400 V	2 x 3 m	**GHG 635 1220 R0008**
4.0 - 6.3 A	no	2 x 3 m	**GHG 635 1200 R0009**
	400 V	2 x 3 m	**GHG 635 1220 R0009**
6.3 - 9 A	no	2 x 3 m	**GHG 635 1200 R0010**
	400 V	2 x 3 m	**GHG 635 1220 R0010**
9 - 12.5 A	no	2 x 3 m	**GHG 635 1200 R0011**
	400 V	2 x 3 m	**GHG 635 1220 R0011**
12.5 - 16 A	no	2 x 3 m	**GHG 635 1200 R0012**
	400 V	2 x 3 m	**GHG 635 1220 R0012**



Accessories

5

Mounting plate Ex-manual motor starter GHG 635-12

Type	Application	Order No.
Mounting plate	Mounting plate for pipe mounting (1" or 2") and square profile 41 x 41 mm or U-profile 60 x 40 mm incl. snap-on fixing clips	**GHG 630 1926 R0001**
Screws size 1	5 self-tapping screws for panel mounting 1 - 2 mm wall thickness	**GHG 630 1925 R0001**
Screws size 2	5 self-tapping screws for panel mounting 2 - 3 mm wall thickness	**GHG 630 1925 R0002**

Dimension drawing | Wiring diagram

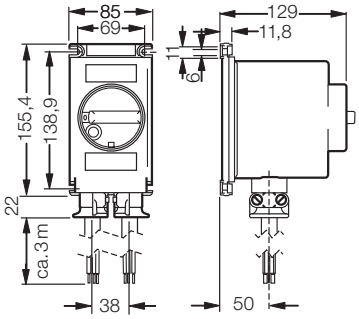

GHG 635-12

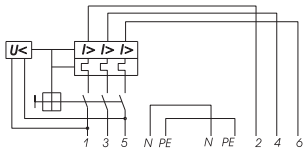

with undervoltage trip

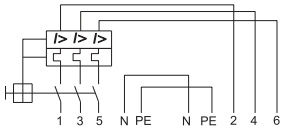

without undervoltage trip

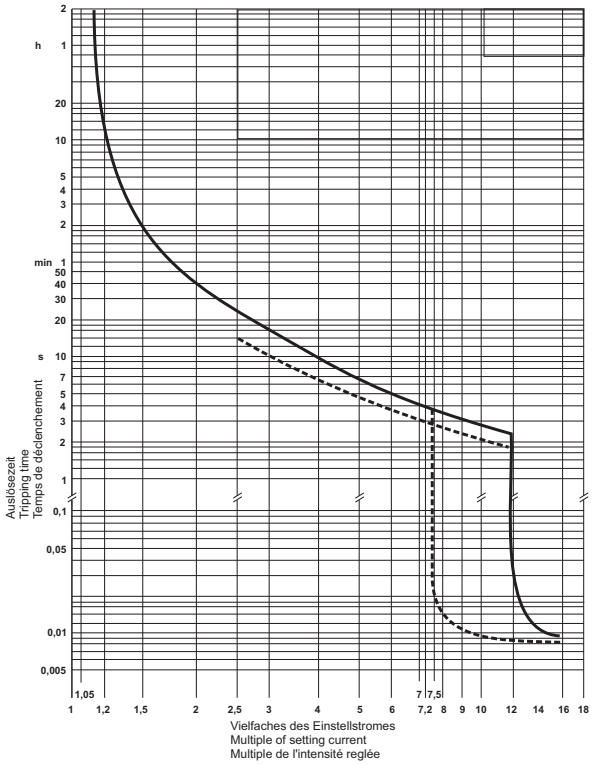

Dimensions in mm