Aluminium Two-Part Desktop Box

Product overview

Sheet metal boxes constructed in '2 u-shell' style for a wide range of applications from small test equipment to heavy duty installations.

- Manufactured in 1mm thick aluminium
- Snap-fit assembly (CUABOX001)
- Wide range of sizes
- Easily customised
- RFI protection
- Polyester based powder coat



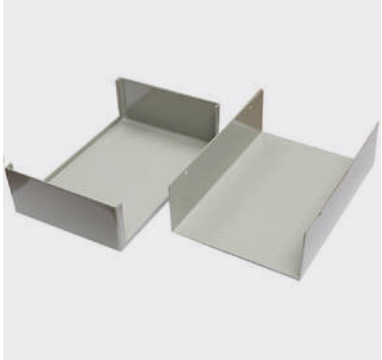

PART NO.	LENGTH	WIDTH	HEIGHT
CUABOX001	40mm	55mm	25mm
CUABOX002	55mm	75mm	25mm
CUABOX003	40mm	75mm	35mm
CUABOX004	105mm	75mm	35mm
CUABOX005	55mm	105mm	35mm
CUABOX006	125mm	105mm	35mm
CUABOX007	55mm	125mm	45mm
CUABOX008	85mm	125mm	60mm
CUABOX009	105mm	155mm	45mm
CUABOX010	105mm	155mm	60mm
CUABOX011	125mm	155mm	75mm
CUABOX012	125mm	175mm	45mm
CUABOX013	155mm	175mm	75mm
CUABOX014	125mm	205mm	60mm
CUABOX015	205mm	205mm	105mm

SPECIFICATION		
Material	Lid and base - 1mm thick 3003 grade aluminium Coating polyester	
Standard colours	RAL 7038	
Standard unit includes	Base and cover	
Screws	4x self tapping screws	CUABOX001 - CUABOX007, CUABOX009, CUABOX012
	8x self tapping screws	CUABOX008, CUABOX010, CUABOX011, CUABOX013, CUABOX014, CUABOX015

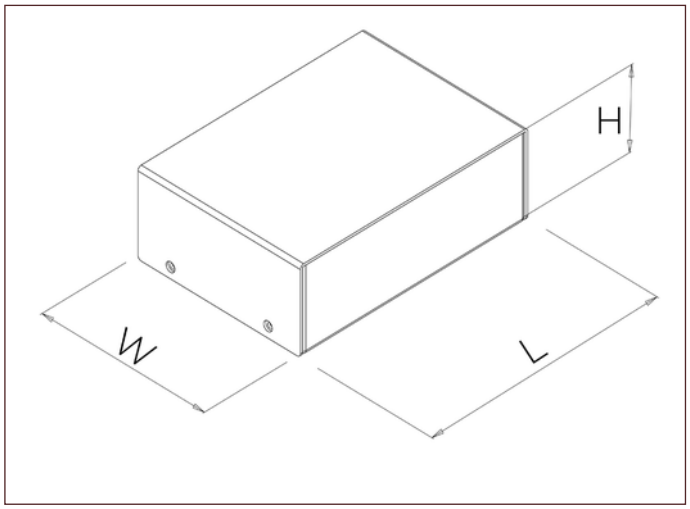

KEY FEATURES

Easily customised | RFI protection | Range of sizes



bsi ISO 9001 Quality Management Systems CERTIFIED
FM 28614

+44 (0)1638 716101 | sales@camdenboss.com | www.camdenboss.com

We operate a constant improvement policy, our products are subject to change without notice.