3/2-directional valve, electrically operated, Series AS1-SOV

R412010680

General series information
Series AS1

- The AVENTICS Series AS1 is a modular, versatile maintenance unit for universal application. This Series offers compact dimensions, is highly efficient, lightweight and easy-to-use. The AVENTICS Series AS guarantees reliability, safety, and efficiency with a simplified assembly and maintenance efforts.



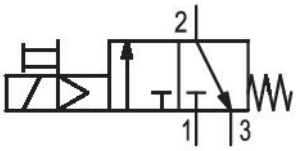

Technical data

Industry	Industrial
Activation	Electrically
Nominal flow Qn	2000 l/min
Version	NC
Compressed air connection	G 1/4
Working pressure min.	2 bar
Working pressure max	10 bar
DC operating voltage	24 V
Sealing principle	soft seal
Pilot	Internal
Connection type	Pipe connection
Parts	3/2-directional valve
Can be assembled into blocks	Can be assembled into blocks

basic valve with electrical connector	Basic valve with pilot valve
Type	Poppet valve
Min. ambient temperature	-10 °C
Max. ambient temperature	50 °C
Medium	Compressed air Neutral gases
Max. particle size	25 µm
Oil content of compressed air min.	0 mg/m³
Oil content of compressed air max.	5 mg/m³
Compressed air connection, exhaust	G 1/4
Air supply	left
Nominal flow Qn 1 to 2	2000 l/min
Nominal flow Qn 2 to 3	380 l/min
Operating voltage	24 V DC
Power consumption DC	2 W
Duty cycle	100 %
Protection class with connection	IP65
Electrical connection type 2	Plug
Electrical connection 2, thread size	M12x1
Weight	0.2321 kg

Material

Housing material	Polyamide
Seal material	Acrylonitrile butadiene rubber
Material front plate	Acrylonitrile butadiene styrene
Part No.	R412010680

Technical information

The pressure dew point must be at least 15 °C less than ambient and medium temperature and may not exceed 3 °C.

Nominal flow Qn with secondary pressure p2 = 6 bar at Δp = 1 bar

Dimensions in mm

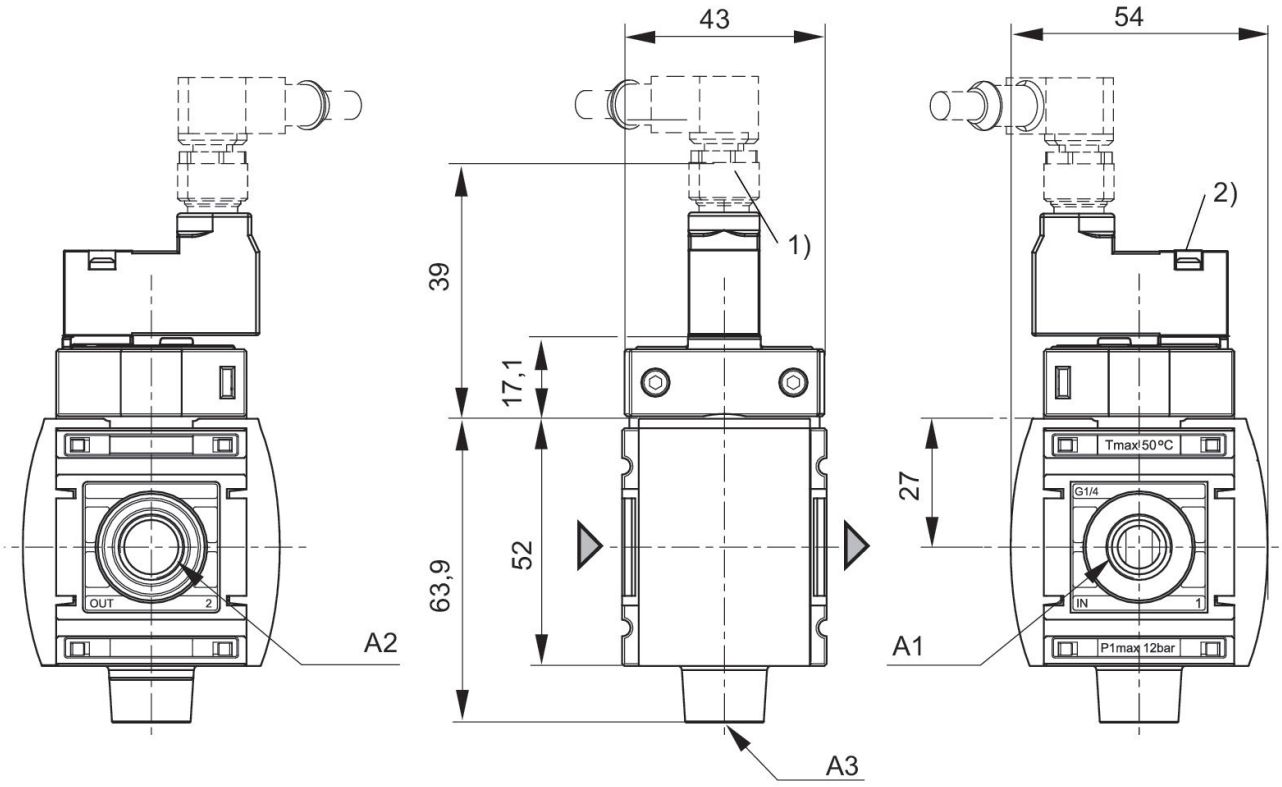

A1 = input
A2 = output
A3 = ventilation port
1) plug M12
2) Manual override

Rear exhaust

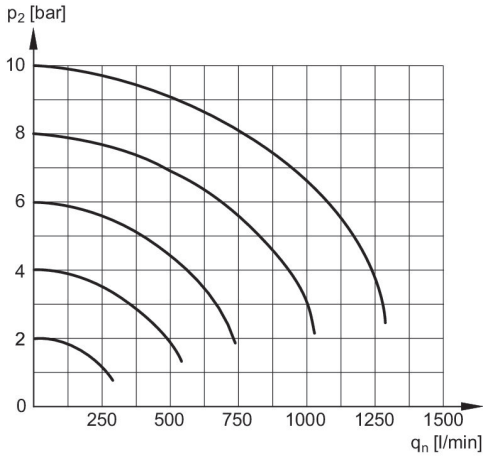

p2 = Secondary pressure
qn = Nominal flow

Flow rate characteristic, p2 = 0,05 - 7 bar

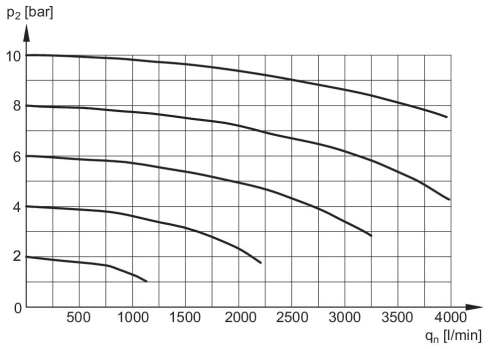

p2 = Secondary pressure
qn = Nominal flow

Pin assignment M12x1

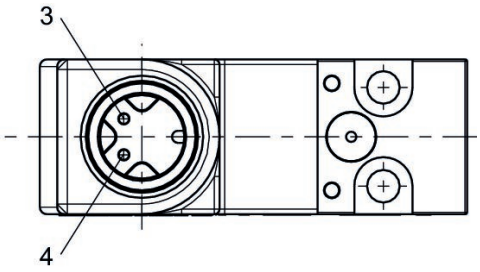

3: +/-
4: +/-

Accessories overview

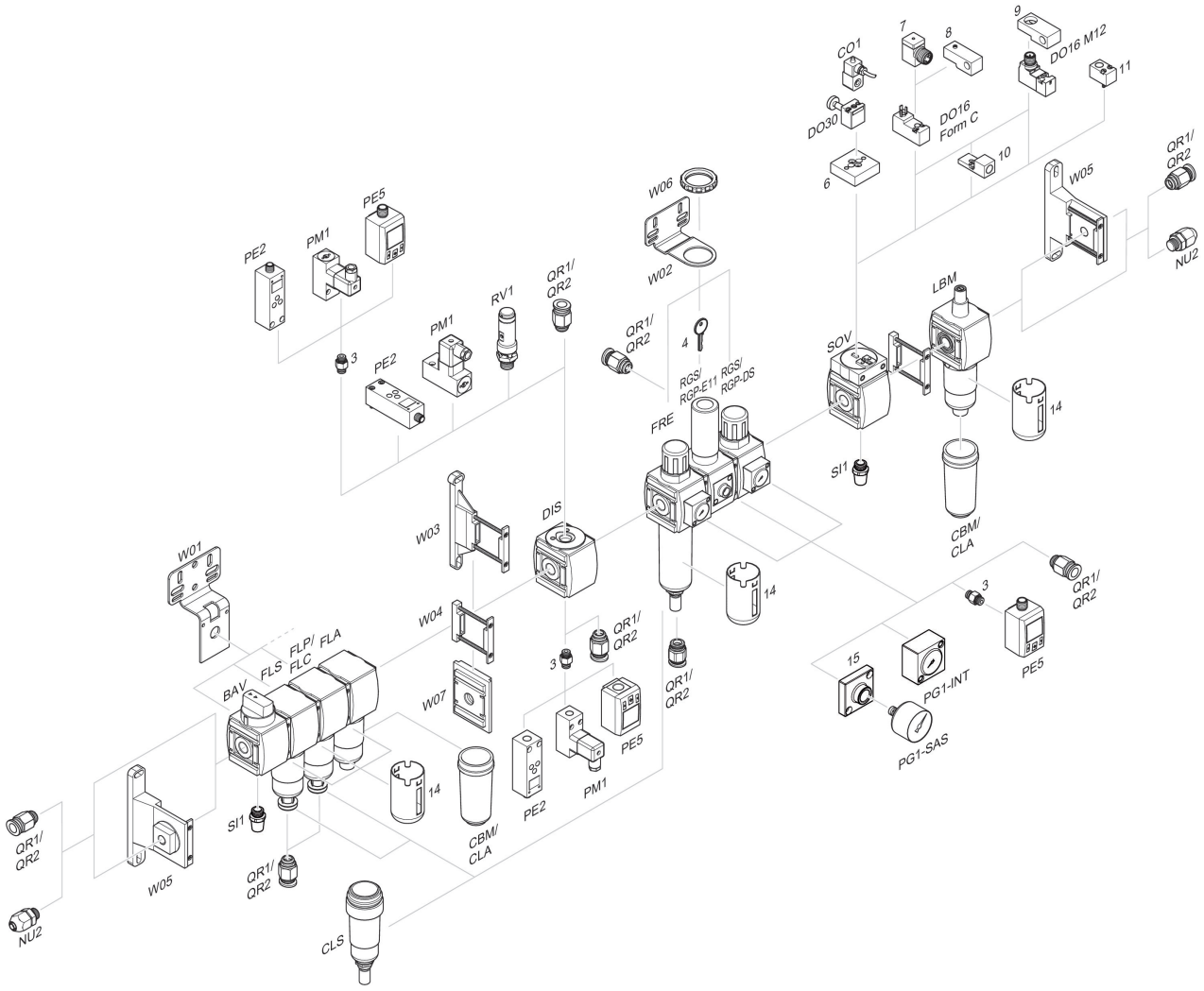

3 = Double nipple 4 = Key for E11 locking 6 = Transition plate DO30 7 = Adapter, Series CON-VP 8 = Mounting aid DO16, form C 9 = Mounting aid DO16, M12 10 = Adapter for external pilot air 11 = Adapter pneumatic operation 14 = Protective guard 15 = Transition plate for assembling a pressure gauge with connection thread G 1/8