DTSM(G)-6 SERIES

6x6 Surface Mounting Type (Ground Terminal Optional)

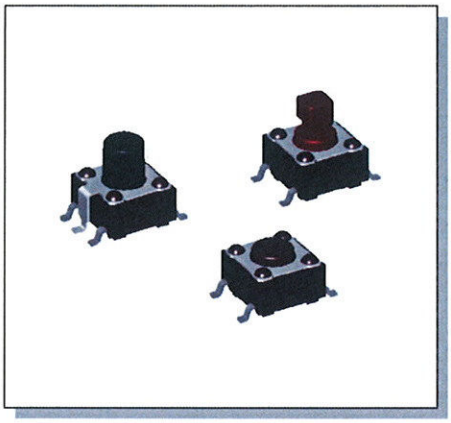

HOW TO ORDER

D T S M [ ] — 6 [ ] [ ] — [ ] — [ ] — [ ]

- SMT
- □=Without Ground Terminal
  G=S.M.T & Ground Terminal
- Height:
  1=4.3mm
  2=5.0mm
  3=7.0mm
  44=7.3mm (SQ.)x2.4mm
  48=7.3mm (SQ.)x2.8mm
  5=9.5mm
  6=13mm
- Operating Force :
  K=Black, 100gf
  N=Brown, 160gf
  R=Red, 260gf
  S=Salmon, 320gf
  Y=Yellow , 520gf
- □=Phosphor Bronze Dome
  S=Stainless Steel Dome
- V=RoHS & Lead Free Solderable
  Q=Halogen Free >Not Available For Halogen Free
- Package:
  B=Tube
  T/R=Tape&Reel

TACT SWITCH

SPECIFICATION

MECHANICAL

Operation Force: 520 ± 130gf Yellow (Y)
320 ± 80gf Salmon (S)
260 ± 50gf Red (R)
160 ± 50gf Brown (N)
100 ± 50gf Black (K)
Stroke: 0.25 +0.2mm / -0.1mm

ENVIRONMENTAL

Operation Temperature: -25°C to +70°C
Storage Temperature: -30°C to +80°C

ELECTRICAL

Electrical Life: *Phosphor Bronze Dome
50,000 cycles for 320gf, 520gf
100,000 cycles for 260gf
200,000 cycles for 100gf, 160gf
*Stainless Steel Dome
300,000 cycles for 320gf, 520gf
500,000 cycles for 260gf
1,000,000 cycles for 100gf, 160gf
Rating: 50mA , 12VDC

PACKAGE

DTSM(G)-61:1000 pcs/reel
DTSM-62:900 pcs/reel
DTSMG-62:1000 pcs/reel
DTSM(G)-63, 64:700 pcs/reel
DTSM(G)-65:380 pcs/reel
DTSM-66:200 pcs/reel
77 pcs/tube

CIRCUIT

DTSM-6

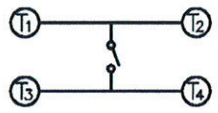

DTSMG-6

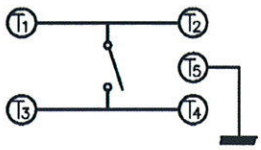

DTSM-6

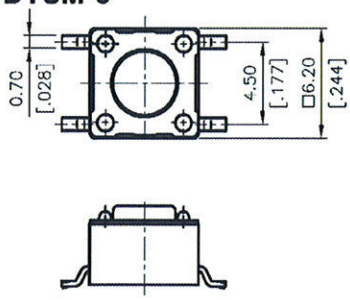

DTSM-6

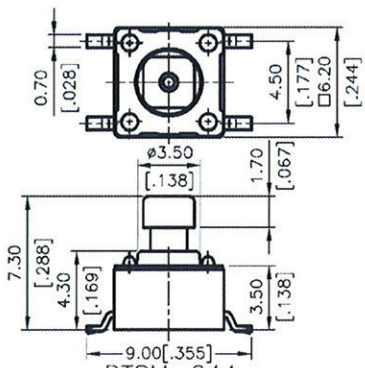

DTSM-644

DTSM-644	□A	2.40	0.095
	□B	1.60	0.063
DTSM-648	□A	2.80	0.110
	□B	2.00	0.079
PROD. NO.	LOC.	MM	INCH.

DTSM-66	13.00[.512]
DTSM-65	9.50[.374]
DTSM-63	7.00[.275]
DTSM-62	5.00[.197]
DTSM-61	4.30[.169]
PROD. NO.	H

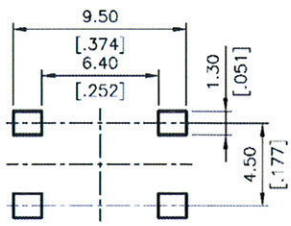

P.C.B LAYOUT

DTSMG-6

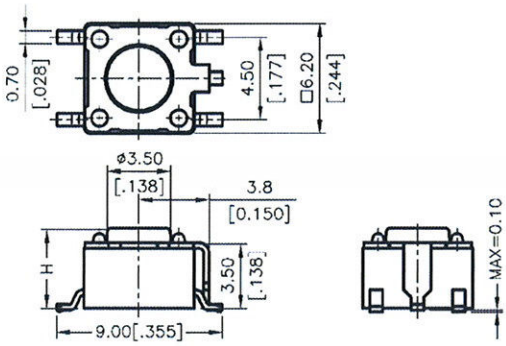

DTSMG-66	13.00[.512]
DTSMG-65	9.50[.374]
DTSMG-63	7.00[.275]
DTSMG-62	5.00[.197]
DTSMG-61	4.30[.169]
PROD. NO.	H

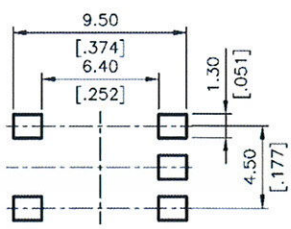

P.C.B LAYOUT