Miniature Solenoid Valve - General Purpose

Threaded Port G1/8", M5

Type 6011

2/2-Way; M5-G1/8"; 0-21 bar



Advantages/Benefits

- **Coil can be changed easily with valve in place**
- **Coil can be locked in 4x 90° positions or move freely between, as required**
- **Medium is only in contact with the valve internals and body**
- **High-quality seal material FPM (Viton) standard**
- **Wide range of cable plug options Type 2506**
- **Compact design**

Design/Function

The valves are based on a modular concept comprising three basic elements; Valve assembly, push-over coil and standard cable plug.
The valve assembly consists of a body to which the armature guide tube containing the plunger, seals and springs is attached.
The coil is pushed over the guide tube and thus isolated from the medium.
The medium is only in contact with the valve internals and body.

A wide selection of pipe and orifice sizes is offered. Valves are available in brass or stainless steel.
All valves have high-quality viton (FPM) seals as standard.

To simplify ordering, a wide selection of standard combinations of valve body, push-over coil and standard cable plug can be ordered with one order number.

Cable plug options of Type 2506 are available to suit special electrical application requirements.

– The modular concept provides flexibility to meet application requirements.

– The valve is interchangeable with Type 200.

Applications

Fluids

Brass version: Neutral gases and liquids, e.g.compressed air, town gas, natural gas, water, hydraulic oil, petrol.
Stainless steel version: Difficult and slightly aggressive media.

Suitable for technical vacuum

Applications

- Pneumatic control
- Shut-off, dosing, filling and ventilating
- Small-scale instruments, laboratory and measuring technology
- Welding technology

bürkert
Easy Fluid Control Systems

Miniature Solenoid Valve - General Purpose **Type 6011**

Threaded Port G1/8", M5

Technical Data Type 6011

Circuit function

A 2/2-way valve, normally closed

Symbol

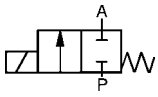

Operating Data (Valve)

Pressure range	0-21 bar (see specifications)
Port connection	Threaded port G 1/8'', M5
Orifice	DN 1.2 - 2.4 mm
Fluid	Neutral gases and liquids, e.g. compressed air, town gas, natural gas, water, hydraulic oil, petrol. Stainless steel version: Difficult and slightly aggressive media. Suitable for techn. vacuum.
Medium temperature Max. ambient temperature	–10 to +100 °C +55 °C
Max. viscosity	21 mm²/s
Response times opening closing	 5-18 ms approx. 8 ms
Installation	as required, but preferably with solenoid system upright

Operating Data (Actuator)

Operating voltages	AC 24, 110, 230 V/50 Hz, DC 12, 24 V/=
Voltage tolerance	±10 %
Power consumption	AC inrush: 9 VA; AC hold: 6 VA/4 W; DC: 4 W
Duty cycle Duty cycle for multiple manifolds	100% continuously rated 60% for manifold mounting (30 min) or use 2W-version (on request)
Cycling rate	up to 1 000 c.p.m.
Protection class with cable plug	IP 65
Electr. connection	Delivery standard: Cable plug DIN 43 650 C, 0-250 V. (other versions see accessories)

Materials

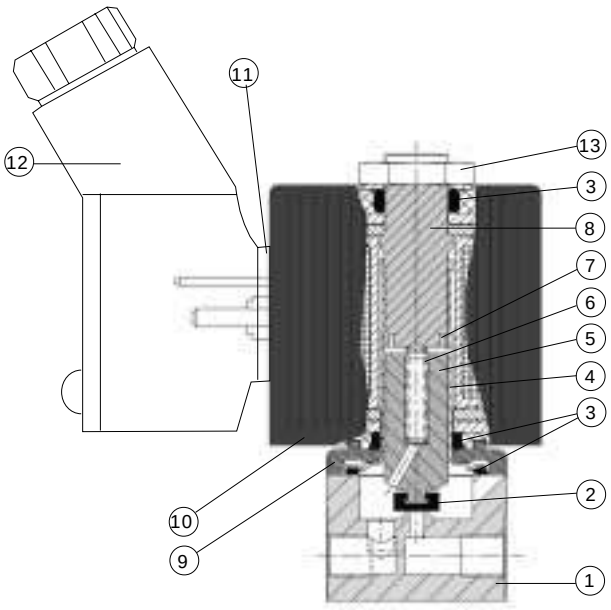

1	Valve body:	Brass, S.Steel 1.4305 (G1/8")
2	Plunger-seal:	FPM (Viton)
3	O-rings:	FPM (Viton)
4	Armature guide tube:	S.Steel 1.4303
5	Plunger:	S.Steel 1.4105
6	Spring:	S.Steel 1.4310
7	Shading ring:	Cu (brass version) Ag (stainless steel version)
8	Stopper:	1.4105
9	Flange:	Zn3 gl cC (surface)
10	Coil:	PA (Polyamide)
11	Flat seal:	NBR
12	Cable plug:	PA (Polyamide)
13	Locknut:	9SMnPb28K (surface Zn5glcA)

Miniature Solenoid Valve - General Purpose **Type 6011**

Threaded Port G1/8", M5

Specifications - Ordering Chart (Other Versions on Request)

Type 6011: brass body, coil 4W

(with standard-cable plug 0-250 V AC/DC)

Circuit function	Orifice [mm]	Kv-value water [m³/h]	QNn-Value air[1] [l/min]	Pressure range[2] [bar] AC	Pressure range[2] [bar] DC	Port connection [inch]	Seal material	Voltage/ frequency [V/Hz]	Weight [g]	**Order-No.**
A	1,2	0,045	48	0–21	0-12	M5	FPM	24/=	109	134 084 G
				0–21	0-12			24/50		134 085 H
				0–21	0-12			110/50		134 086 A
				0–21	0-12			230/50		134 087 B
	1,6	0,06	65	0–12	0- 6	M5	FPM	24/=	109	134 088 L
				0–12	0- 6			24/50		134 089 M
				0–12	0- 6			110/50		134 090 J
				0–12	0- 6			230/50		134 091 F
	1,6	0,06	65	0–12	0- 6	G 1/8	FPM	24/=	131	134 071 J
				0–12	0- 6			24/50		134 092 G
				0–12	0- 6			110/50		134 093 H
				0–12	0- 6			230/50		134 094 A
	2,0	0,11	120	0– 8	0-4,5	G 1/8	FPM	24/=	131	134 095 B
				0– 8	0-4,5			24/50		134 096 C
				0– 8	0-4,5			110/50		134 097 D
				0– 8	0-4,5			230/50		134 098 N
	2,4	0,13	140	0– 6	0- 3	G 1/8	FPM	24/=	131	134 099 P
				0– 6	0- 3			24/50		134 100 Z
				0– 6	0- 3			110/50		134 101 N
				0– 6	0- 3			230/50		134 102 P

Type 6011: stainless steel body (VA); coil 4W;

(with standard-cable plug 0-250 V AC/DC)

Circuit function	Orifice [mm]	Kv-value water [m³/h]	QNn-Value air[1] [l/min]	Pressure range[2] [bar] AC	Pressure range[2] [bar] DC	Port connection [inch]	Seal material	Voltage/ frequency [V/Hz]	Weight [g]	**Order-No.**
A	1,6	0,06	65	0–12	0- 6	G 1/8	FPM	24/=	127	134 103 Q
				0–12	0- 6			24/50		134 104 R
				0–12	0- 6			110/50		134 105 J
				0–12	0- 6			230/50		134 106 K
	2,0	0,11	120	0– 8	0-4,5	G 1/8	FPM	24/=	127	134 107 L
				0– 8	0-4,5			24/50		134 108 V
				0– 8	0-4,5			110/50		134 109 W
				0– 8	0-4,5			230/50		134 110 J
	2,4	0,13	140	0– 6	0- 3	G 1/8	FPM	24/=	127	134 111 F
				0– 6	0- 3			24/50		134 112 G
				0– 6	0- 3			110/50		134 113 H
				0– 6	0- 3			230/50		134 114 A

[1] Measured with 6 bar upstream pressure and 1 bar pressure drop across the valve at +20 °C.
[2] All pressures quoted are gauge pressures with respect to the prevailing atmospheric pressure.

Miniature Solenoid Valve - General Purpose **Type 6011**

Threaded Port G1/8", M5

Dimensions (in mm)

Solenoid coil: 4W power consumption

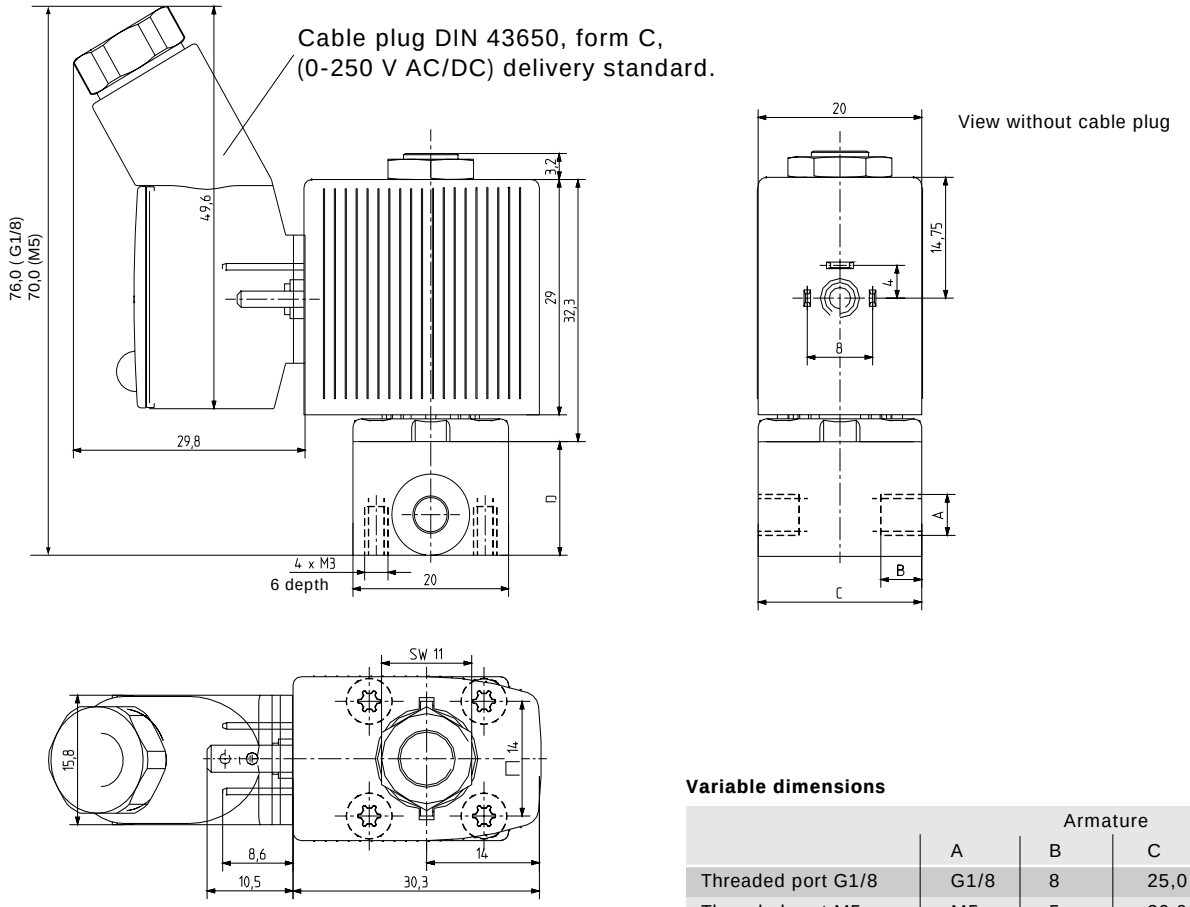

Variable dimensions

	Armature			
	A	B	C	D
Threaded port G1/8	G1/8	8	25,0	19,5
Threaded port M5	M5	5	20,0	14,0

Cable plug to DIN 43650, Form C

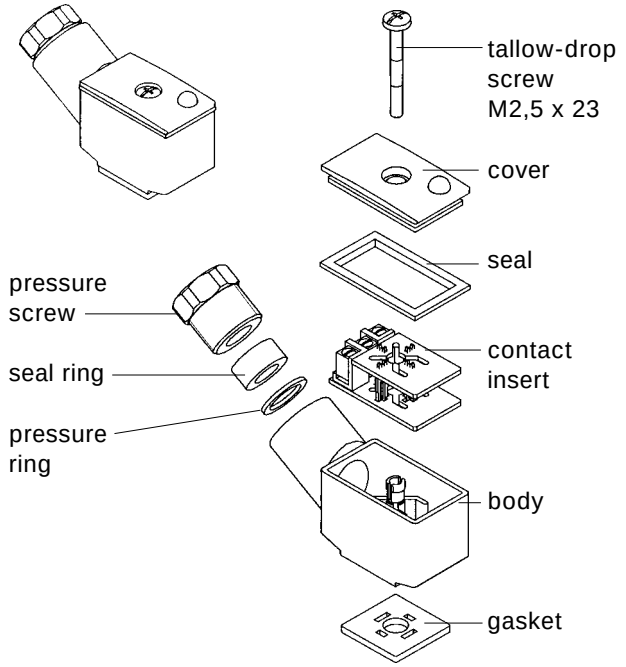

Ordering Chart for Accessories

Device/ Accessory	Features	**Order-No.**
Cable-plugs[1] Type 2506	Standard cable plug, 0–250 V AC/DC (standard-delivery)[1]	008 353 P
	with LED, 12–24 V AC/DC	008 402 A
	with LED, 100-120 V AC/DC	008 403 B
	with LED, 200-240 V AC/DC	008 404 C
	with LED + varistor, 12–24 V AC/DC	008 408 Q
	with LED + varistor, 100–120 V AC/DC	008 409 R
	with LED + varistor, 200–240 V AC/DC	008 410 D
	(optional wirings and connection specifications see data sheet Type 2506)	

[1] The standard cable plug (0-250 V AC/DC), Order-No. 008 353 P is part of the standard delivery.
Ordering of optional cable plugs with separate ordering number.

A wide selection of further cable plugs is available (see special data sheet Type 2506)