6307-2Z

SKF Explorer

Dimensions

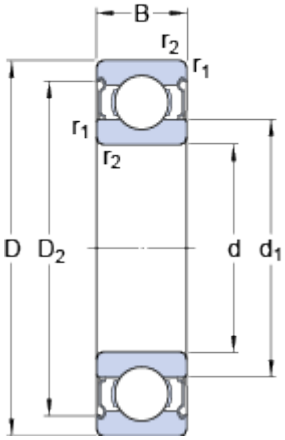

d		35	mm
D		80	mm
B		21	mm
d_1		49.56	mm
D_2		69.2	mm
$r_{1,2}$	min.	1.5	mm

Abutment dimensions

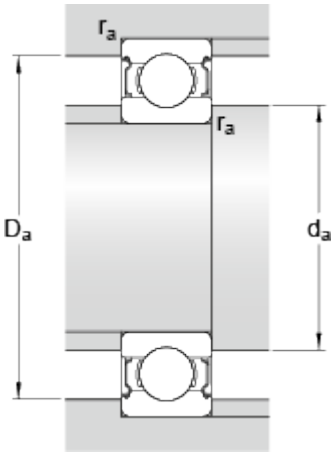

d_a	min.	44	mm
d_a	max.	49.5	mm
D_a	max.	71	mm
r_a	max.	1.5	mm

Calculation data

Basic dynamic load rating	C	35.1	kN
Basic static load rating	C_0	19	kN
Fatigue load limit	P_u	0.815	kN
Reference speed		19000	r/min
Limiting speed		9500	r/min
Calculation factor	k_r	0.03	
Calculation factor	f_0	13.1	

Mass

Mass bearing	0.475	kg