E30451

Gasket

SEAL RING EPDM G1/2

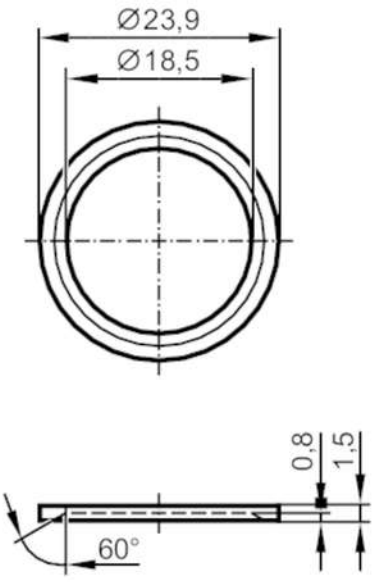

Application		
Design		for units with process connection G ½
Operating conditions		
Ambient temperature	[°C]	-40...130
Tests / approvals		
Standard		DIN EN ISO 1179-2
Mechanical data		
Weight	[g]	4.2
Inside diameter	[mm]	18.5
External diameter	[mm]	23.9
Materials		EPDM
Remarks		
Pack quantity		10 pcs.