# 720 BLK Series Sealed and Rugged Keypads

These tough, water resistant keypads feature moving, tactile keys with a responsive 'over-centre' action. High contrast white keytop characters are permanently laser marked on black polymer keys. Function keys are in an easily recognizable colour coded format to present a contemporary and visually striking keypad.



The keypad can be installed on the surface or under the panel.
( Underpanel Installation Instructions are in the Underpanel Fitting Kit )
Fit the supplied silicone seal into the seal groove on the keypad
Use the groove on top for underpanel, and on back for surface fix.
The wide part of the seal goes into the groove – see picture below of the seal fitted to the back of the keypad.

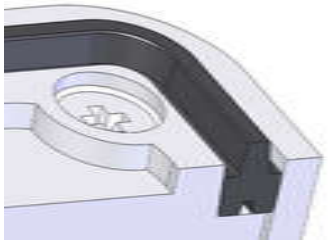

## Connection Details

### Connection Details for 4 Key Keypad

CONTACT CONNECTIONS




(As viewed from rear of keypad)




KEY LOCATION
(As viewed from front of keypad)

| CONTACT MATRIX | |
|---|---|
| CONNEC. PIN | ROW/ COLUMN |
| 1 | common |
| 2 | D |
| 3 | C |
| 4 | B |
| 5 | A |

### Connection Details for 12 Key Keypad

CONTACT CONNECTIONS

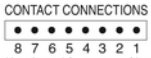


(As viewed from rear of keypad)




KEY LOCATION
(As viewed from front of keypad)

| CONTACT MATRIX | |
|---|---|
| CONNEC. PIN | ROW/ COLUMN |
| 1 | A |
| 2 | B |
| 3 | 1 |
| 4 | 2 |
| 5 | 3 |
| 6 | - |
| 7 | D |
| 8 | C |

### Connection Details for 16 Key Keypad

CONTACT CONNECTIONS

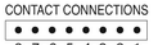


(As viewed from rear of keypad)

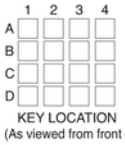


KEY LOCATION
(As viewed from front of keypad)

| CONTACT MATRIX | |
|---|---|
| CONNEC. PIN | ROW/ COLUMN |
| 1 | A |
| 2 | B |
| 3 | 1 |
| 4 | 2 |
| 5 | 3 |
| 6 | 4 |
| 7 | D |
| 8 | C |

## Electrical

| | |
|---|---|
| Contact Bounce | **5 ms (max)** |
| Contact Resistance | **100 ohms (max)** |
| Insulation Resistance | **50 Mohms (min)** |
| Breakdown Voltage | **500 V AC (max 60 secs.)** |
| Switch Rating | **24V DC 50mA (max)** |
| Connection | **X-Y Matrix** |

## Mechanical

| | |
|---|---|
| Operational Life | **2 million cycles (min) per key** |
| Keytop Travel | **1.4mm nominal** |
| Actuation Force | **150 grams nominal** |
| Connector | **0.1"pitch, gold plated square pin** |
| Mating Connector | **Molex 2695 Series or equivalent** |

## Performance

| | |
|---|---|
| Operational Temp | **-20°C to 60°C** |
| Impact Rating | **5 J** |
| Vibration/Shock | **ETSI 300 019 5M3** |
| Water / Dust sealed | **IP65 (when fixed to suitable panel )** |

## Part Numbers

| | |
|---|---|
| 7202-040020 | **720BLK SERIES 4 KEY** |
| 7202-12T020 | **720BLK SERIES 12 KEY** |
| 7202-16T020 | **720BLK SERIES 16 KEY** |
| 7200-FK020 | **UNDERPANEL FITTING KIT** |

## Accessories

| | |
|---|---|
| 4200-00 | **RS232 Encoder Interface Module** |
| 4500-00 | **450 USB Encoder Interface Module** |
| 4500-10 | **450i USB Encoder Interface Module with Buzzer and Illumination Control** |
| Replacement Seals -- | go to www.storm-interface.com |

## Dimensions

| | |
|---|---|
| Overall sizes | **See following page.** |
| Panel Cutout DXF | **Download .dxf and .stp files from** |
| Surface Model STEP | **www.storm-interface.com** |






Whilst every effort is made to ensure details are correct at time of print, specifications are subject to change without notice
www.storm-interface.com

FM 39602

*Storm is a trademark of Keymat Technology Ltd.*
*Storm Interface is a trading name of Keymat Technology Ltd.*
***Storm Interface products include technology protected by international patents and design registration. All rights reserved***

# 720 BLK Series Sealed and Rugged Keypads

Install the keypad onto the surface of a panel as follows :-

- Fit the seal to the rear of the keypad
- Place the keypad onto the panel and fit the self locking nuts to the studs on the back
- Recommended tightening torque 50Ncm

Side View : 4, 12, 16

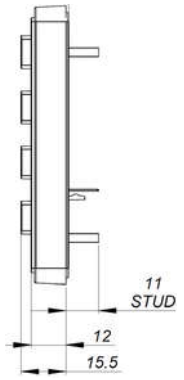


Front and Back View : 4 way

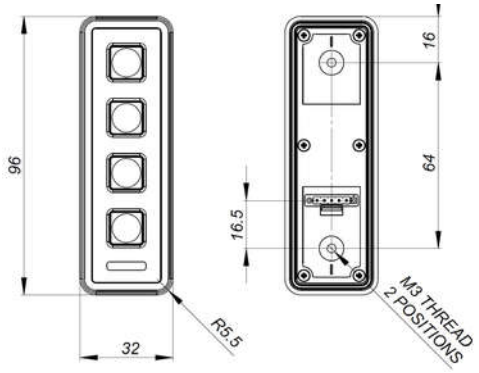


Panel Cutout : 4 way

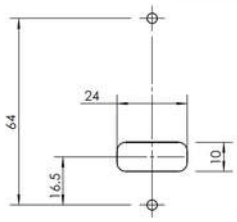


Front and Back View, 12 way

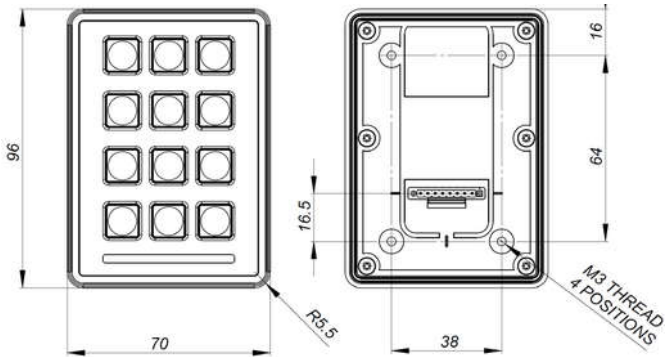


Panel Cutout : 12 way

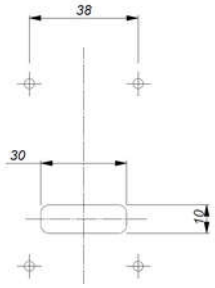


Front and Back View, 16 way

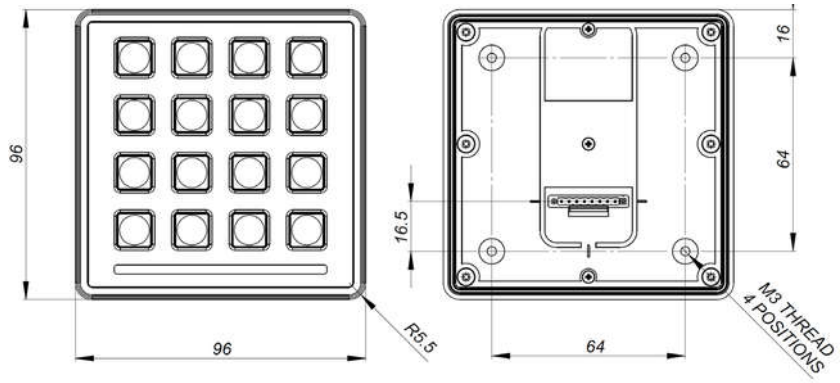


Panel Cutout : 16 way

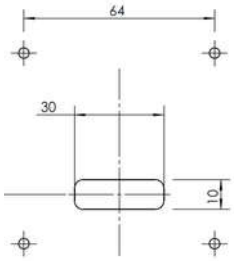


All panel dims in mm.
Corner Rads all M3



Whilst every effort is made to ensure details are correct at time of print, specifications are subject to change without notice
www.storm-interface.com

FM 39602

www.storm-interface.com

*Storm is a trademark of Keymat Technology Ltd.*
*Storm Interface is a trading name of Keymat Technology Ltd.*
***Storm Interface products include technology protected by international patents and design registration. All rights reserved***