Datasheet - AZM 161-B1-2053 WITH BALL LATCH

Solenoid interlock / AZM 161 / Actuator

☒ Preferred typ



(Minor differences between the printed image and the original product may exist!)

Ordering details

Product type description	AZM 161-B1-2053 MIT KUGELRASTUNG
Article number	101173089
EAN code	4030661302041
eCl@ss	27-27-92-16

Global Properties

Product name	Gerader Betätiger B1-2053 mit Kugelrastung
Weight	25 g

Mechanical data

Design of actuators	straight
Minimum actuating radius	150 mm

notice

On hinged guards, minimum actuating radius at 90° to the plane of the actuator 180 mm
minimum actuating radius on hinged guards in line with the plane of the actuator 150 mm

Documents

Mounting and wiring instructions (de, en, fr, it, es, jp) 203 kB, 08.07.2008
Code: m_zm1p02

Images

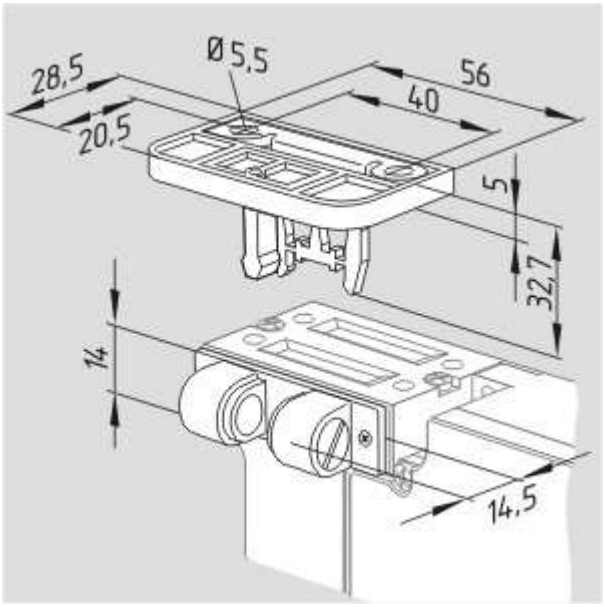

Dimensional drawing (miscellaneous)

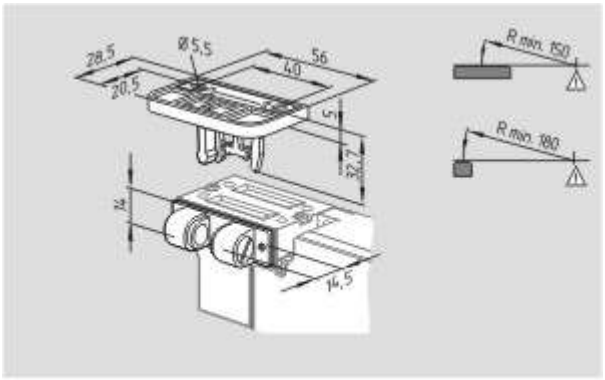

Dimensional drawing (miscellaneous)



Actuating radius

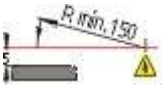

Actuating radius

K.A. Schmersal GmbH & Co. KG, Möddinghofe 30, D-42279 Wuppertal
The data and values have been checked throroughly. Technical modifications and errors excepted.
Generiert am 30.05.2015 - 14:35:10h Kasbase 3.1.12.F.64I