Pomona ELECTRONICS

Technical Data Sheet

Model 6730
Wide Jaw Kelvin Lead Set

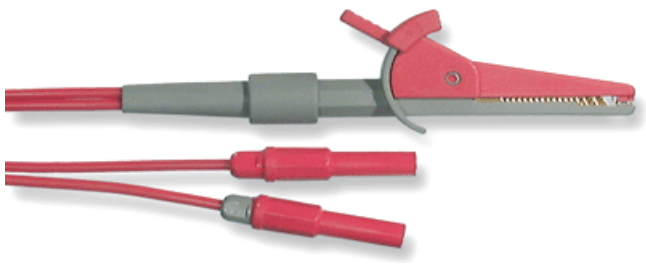

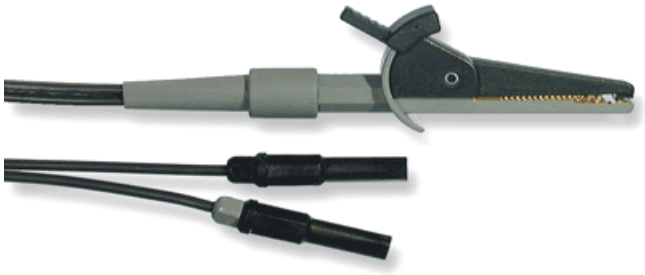

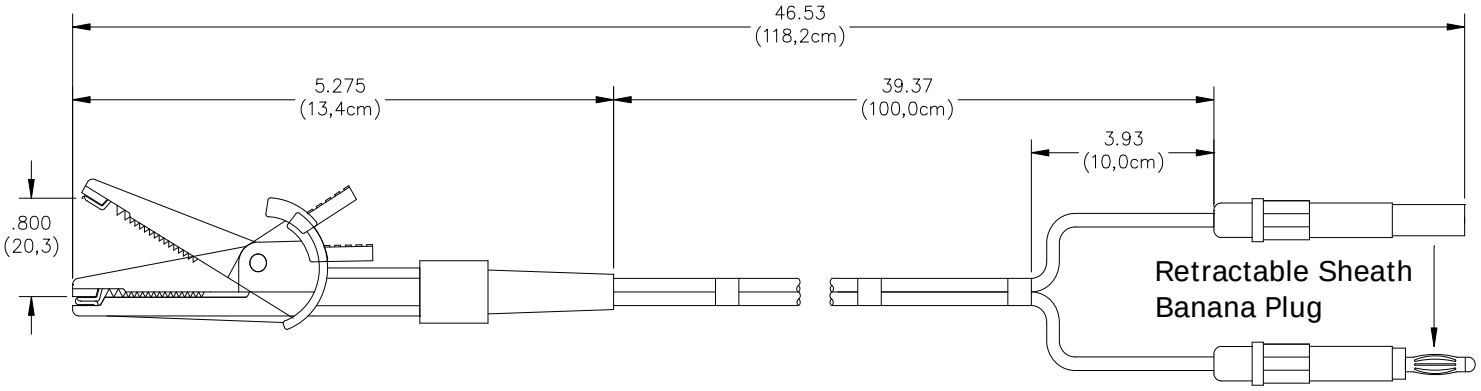

Features

- True wire four wire lead set with gold plated alligator clips that open to a wide .800” (20.3mm).
- Long leads, over 46” (188 cm).
- Standard banana plugs with retractable sheath allows versatility in connecting to equipment.
- Color coded for easy source and sense identification.

Materials

Alligator Contacts:	Gold Plated Brass
Banana Plugs:	Nickel Plated Beryllium Copper
Spring:	Steel
Insulation:	Nylon 65, Nylon 6, Lucel, PVC
Wire:	Silicone

Ratings

Operating Voltage:	33 Vrms / 70 Vdc Max.
Current:	2A Max.
Temperature:	-10º to +55ºC

Ordering Information

Model: 6730

USA: Sales: 800-490-2361
Technical Support: technicalsupport@pomonatest.com
Fax: 425-446-5844
Europe: 31-(0) 40 2675 150 **International:** 425-446-5500
Where to Buy: www.pomonaelectronics.com

All dimensions are in inches. Tolerances (except noted): .xx = ±.02” (,51 mm), .xxx = ± .005” (,127 mm). All specifications are to the latest revisions. Specifications are subject to change without notice. Registered trademarks are the property of their respective companies.

Copyright © 2009