Emergency Stop Switches

ES-P & ES-SS & ES-SS(P) Operating Instructions



Type ES-P (Plastic)
Knock out for plastic version

Type ES-SS (Stainless Steel)

Type ES-SS(P) (Stainless Steel)
with button protection shroud and padlock holes

IMPORTANT NOTE:

Read and understand these instructions before installing, operating, or maintaining this equipment.
The product is designed to be a component of a customised safety orientated control system. It is the responsibility of each manufacturer to ensure the correct overall functionality of its systems and machines. IDEM, its subsidiaries and affiliates, are not in a position to guarantee all of the characteristics of a given system or product not designed by IDEM.

Application:

Emergency Stop Switches are mounted on machines and sections of plant conveyors that cannot be protected by guards.
In combination with any dual channel safety monitoring controllers these switches can be used as emergency stop devices and monitored for up to Category 4/PLe to ISO13849-1.

Operation:

All Emergency Stop Switches conform to European Standard EN ISO 13850 (formerly EN 418) and IEC 60947-5-5. They have a positive mechanical linkage between the switch contacts and the E Stop Button. The switches are mechanically latched and can then only be returned to the operational condition by a pressing the reset button as required by EN ISO 13850.

Installation Guide:

1. Installation of all switches must be in accordance with a risk assessment for the individual application and in accordance with local wiring regulations and EN60204-1. Installation must only be carried out by competent personnel and in accordance with these instructions.

2. M4 mounting bolts must be used to fix the switches. Tightening torque for mounting bolts to ensure reliable fixing is 4 Nm. Tightening torque for the lid screws, conduit entry plugs and cable glands must be 1.5 Nm to ensure IP seal. Only use the correct size gland for the conduit entry and cable outside diameter.

3. Check operation of all switches and the control circuits by activating the switch (depress the Red Button) and resetting each switch by twisting the Red Button. Ensure each time that the switches latch off and require manual resetting.

4. For versions with the Protection Shroud ensure that the padlock size is suitable to prevent re-setting of the button.

Maintenance:

Every Week: Check correct operation of the control circuits and latching mechanism. Inspect for damage to the E Stop button or casing.
Every 6 Months: Isolate power and remove cover. Check screw terminal tightness and check for signs of moisture ingress. Never attempt to repair any switch.

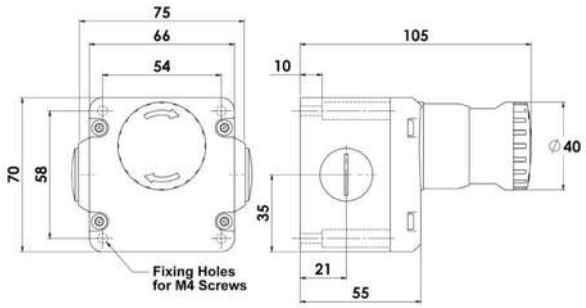

TYPE: ES-SS(STAINLESS STEEL)

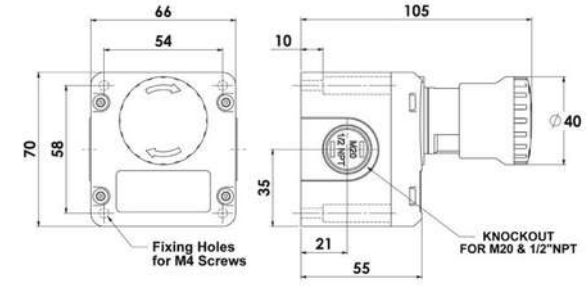

TYPE: ES-P

Standards:	IEC60947-5-5 EN1088 ISO13850
Case Material	Stainless Steel 316 or Plastic
Safety Contact type	IEC 60947-5-1 Double break Type Zb
Contact Material	Silver
Termination	Clamp up to 2.5 sq. mm conductors
Rating	Utilisation Category : AC15
Operational Rating	AC15 A300 240V. 3A. / 120V 6A. ac 24V. 2.5A dc inductive
Thermal Current (Ith)	10A.
Rated Insulation Voltage (Ui)	500V.
Withstand Voltage (Uimp)	2500V.
Short Circuit Overload Protection	Fuse Externally 10A. (FF)
Operating Temperature	-25C / 80C.
Enclosure Protection	IP67 Plastic or IP69K Stainless Steel

Safety Classification and Reliability Data:	
Mechanical Reliability B10d	1.5 x 10^6 operations at 100mA load
EN 954-1	up to Category 4 with Safety Relay
ISO 13849-1	up to PLe depending upon system architecture
EN 62061	up to SIL3 depending upon system architecture
Safety Data - Annual Usage	8 cycles per hour / 24 hours per day / 365 days
PFHd	<1.0 x 10^{-7}
Proof Test Interval (Life)	21 years
MTTFd	214 years

IDEM SAFETY SWITCHES Ltd., 2 Ormside Close, Hindley Industrial Estate, Hindley Green, Wigan, WN2 4HR UK. Tel: +44 (0)1942 257070 Fax.: +44 (0)1942 257076
IDEM (USA) 4075 Papazian Way, Suite 105, Fremont, CA 94538 Tel:510-445-0751 Fax:1866-431-7064 email: sales@idemsafety.com Web: www.idemsafety.com

Doc: 102531
June 2012