Standard
SIL2/PLd, optical

Sendix 5853FS2 / 5873FS2 (shaft / hollow shaft)

SSI / BiSS + SinCos



The absolute singleturn encoders 5853FS2 and 5873FS2 of the Sendix family are suited for use in safety-related applications up to SIL2 according to EN 61800-5-2 or PLd to EN ISO 13849-1.

The extra strong Safety-Lock™ design interlocked bearings, the high integration density of the components based on OptoASIC technology and the rugged die-cast housing make these devices ideal also for demanding applications outdoors up to IP67.

Safety-Lock™ | High rotational speed | Temperature range | High protection level | High shaft load capacity | Shock / vibration resistant | Magnetic field proof | Reverse polarity protection | SinCos | Optical sensor

Functional Safety

- Encoder with individual certificate from TÜV.
- Suitable for applications up to SIL2 acc. to EN 61800-5-2.
- Suitable for applications up to PLd acc. to EN ISO 13849-1.
- SSI or BiSS interface with incremental SinCos tracks with 2048 ppr.
- Certified mechanical mounting + electronic.

Flexible

- Shaft and hollow shaft versions.
- Cable and connector variants.
- Various mounting options available.

Order code Shaft version

8.5853FS2	.	X	X	X	X	.	X	X	2	X
Type		a	b	c	d		e	f		g

a *Flange*
1 = clamping flange, IP65, ø 58 mm [2.28“]
3 = clamping flange, IP67, ø 58 mm [2.28“]

b *Shaft (ø x L)*
2 = 10 x 20 mm [0.39 x 0.79“], with flat
A = 10 x 20 mm [0.39 x 0.79“], with feather key

c *Interface / supply voltage*
3 = SSI, BiSS + 2048 ppr. SinCos / 5 V DC
4 = SSI, BiSS + 2048 ppr. SinCos / 10 ... 30 V DC

d *Type of connection*
1 = axial cable, 1 m [3.28‘] PVC
A = axial cable, special length PVC *)
2 = radial cable, 1 m [3.28‘] PVC
B = radial cable, special length PVC *)
3 = axial M23 connector, 12-pin
4 = radial M23 connector, 12-pin

*) Available special lengths (connection types A, B):
2, 3, 5, 8, 10, 15 m [5.56, 9.84, 16.40, 26.25, 32.80, 49.21‘]
order code expansion .XXXX = length in dm
ex.: 8.5853FS2.124A.G322.0030 (for cable length 3 m)

e *Code*
B = SSI, binary
C = BiSS, binary
G = SSI, gray

f *Resolution* [1]
A = 10 bit
1 = 11 bit
2 = 12 bit
3 = 13 bit
4 = 14 bit
7 = 17 bit

g *Options (service)*
1 = no option
2 = status LED
3 = SET button and status LED

Optional on request
- Ex 2/22 [2]
- other resolutions
- surface protection salt spray

1) Resolution, preset value and count direction are factory-programmable.
2) For the cable connection type, cable material PUR.

© Fritz Kübler GmbH, subject to errors and changes. 03/2023

Standard
SIL2/PLd, optical

Sendix 5853FS2 / 5873FS2 (shaft / hollow shaft)

SSI / BiSS + SinCos

Order code Hollow shaft

8.5873FS2 . X X X X . X X 2 X
Type — a b c d — e f — g

a *Flange*
9 = with torque stop FS, flexible, IP65
J = with torque stop FS, flexible, IP67
A = with torque stop FS, rigid, IP65 (incl. torque pin FS)
K = with torque stop FS, rigid, IP67 (incl. torque pin FS)
B = with stator coupling FS, ø 63 mm [2.48"], IP65
L = with stator coupling FS, ø 63 mm [2.48"], IP67

b *Through hollow shaft*
3 = ø 10 mm [0.39"]
4 = ø 12 mm [0.47"]
5 = ø 14 mm [0.55"]
Tapered shaft
K = ø 10 mm [0.39"]

c *Interface / supply voltage*
3 = SSI, BiSS + 2048 ppr. SinCos / 5 V DC
4 = SSI, BiSS + 2048 ppr. SinCos / 10 ... 30 V DC

d *Type of connection*
2 = radial cable, 1 m [3.28'] PVC
B = radial cable, special length PVC *)
E = tangential cable, 1 m [3.28'] PVC
F = tangential cable, special length PVC *)
4 = radial M23 connector, 12-pin

*) Available special lengths (connection types B, F):
2, 3, 5, 8, 10, 15 m [5.56, 9.84, 16.40, 26.25, 32.80, 49.21']
order code expansion .XXXX = length in dm
ex.: 8.5873FS2.B44B.G322.0030 (for cable length 3 m)

e *Code*
B = SSI, binary
C = BiSS, binary
G = SSI, gray

f *Resolution* [1]
A = 10 bit
1 = 11 bit
2 = 12 bit
3 = 13 bit
4 = 14 bit
7 = 17 bit

g *Options (service)*
1 = no option
2 = status LED
3 = SET button and status LED

Optional on request
- Ex 2/22 (not for type of connection E, F) [2] [3]
- other resolutions
- surface protection salt spray [3]

Accessories		Order no.
EMC shield terminal	for top-hat rail mounting	**8.0000.4G06.0312**
Screw retention	Loctite 243, 5 ml	**8.0000.4G05.0000**
Bellows coupling, safety-oriented	You will find an overview of our couplings for Sendix shaft encoders under kuebler.com/accessories.	
Safety modules Safety-M compact	You will find an overview of our systems and components for Functional Safety and the corresponding software under kuebler.com/safety.	
LED SSI display 570 / 575	Electronic position display up to 32 bit. You will find an overview or under kuebler.com/position_display	

Connection technology		Order no.
Cordset, pre-assembled	M23 female connector with coupling nut, 12-pin, cw single ended 2 m [6.56'] PVC cable [4]	**8.0000.6901.0002.0031**
	M23 female connector with coupling nut, 12-pin, cw M23 male connector with external thread, 12-pin, ccw 2 m [6.56'] PVC cable [4]	**8.0000.6905.0002.0032**
Connector, self-assembly	M23 female connector with coupling nut, 12-pin, cw	**8.0000.5012.0000**

Further Kübler accessories can be found at: kuebler.com/accessories
Further Kübler cables and connectors can be found at: kuebler.com/connection-technology

1) Resolution, preset value and count direction are factory-programmable.
2) For the cable connection type, cable material PUR.
3) Not possible for flange type A and K.
4) Other lengths available.

© Fritz Kübler GmbH, subject to errors and changes. 03/2023

Standard
SIL2/PLd, optical

Sendix 5853FS2 / 5873FS2 (shaft / hollow shaft)

SSI / BiSS + SinCos

Technical data

Notes regarding "Functional Safety"

These encoders are suitable for use in safety-related systems up to SIL2 acc. to EN 61800-5-2 and PLd to EN ISO 13849-1 in conjunction with controllers or evaluation units, which possess the necessary functionality.

Additional functions can be found in the operating manual.

Safety characteristics

Classification	PLd / SIL2
System structure	2 channel (Cat. 3)
PFH_d value [1]	2.16 x 10^{-8} h^{-1}
Mission time / Proof test interval	20 years
Relevant standards	EN ISO 13849-1:2015; EN ISO 13849-2:2012; EN 61800-5-2:2007

Electrical characteristics

Supply voltage		5 V DC (±5 %) or 10 ... 30 V DC
Current consumption (no load)	5 V DC	max. 70 mA
	10 ... 30 V DC	max. 45 mA
Reverse polarity protection of the supply voltage		yes
Short circuit proof outputs		yes [2]

Mechanical characteristics

Maximum speed shaft version		
	up to 70 °C [158 °F]	12000 min^{-1}, 10000 min^{-1} (continuous)
	up to T_{max}	8000 min^{-1}, 5000 min^{-1} (continuous)
Maximum speed hollow shaft version		
	up to 70 °C [158 °F]	9000 min^{-1}, 6000 min^{-1} (continuous)
	up to T_{max}	6000 min^{-1}, 3000 min^{-1} (continuous)
Starting torque - at 20 °C [68 °F]		
	shaft version	< 0.01 Nm
	hollow shaft version	< 0.03 Nm
Mass moment of inertia		
	shaft version	4.0 x 10^{-6} kgm^2
	hollow shaft version	7.0 x 10^{-6} kgm^2
Insertion depth for shaft		
	hollow shaft version	min. 34 mm [1.34"]
Load capacity of shaft	radial	80 N
	axial	40 N
Weight		approx. 0.45 kg [15.87 oz]
Protection acc. to EN 60529		IP65, IP67
Working temperature range		-40 °C ... +90 °C [-40 °F ... +194 °F] [3]
Material	shaft / hollow shaft	stainless steel
	flange	aluminum
	housing	zinc die-cast
	cable	PVC (PUR for Ex 2/22)
Shock resistance acc. to EN 60068-2-27		500 m/s^2, 11 ms
Vibration resistance acc. to EN 60068-2-6		200 m/s^2, 5 ... 2000 Hz

EMC

Relevant standards	EN 55011 class B :2009 / A1:2010 EN 61326-1:2013 EN 61326-3-1:2008

SSI interface

Output driver		RS485 transceiver type
Permissible load / channel		max. +/- 20 mA
Signal level	HIGH	typ. 3.8 V
	LOW at I_{Load} = 20 mA	typ. 1.3 V
Resolution		10 ... 14 bit and 17 bit
Code		binary or gray
SSI clock rate		50 kHz ... 2 MHz
Data refresh rate	ST resolution ≤ 14 bit	≤ 1 µs
	ST resolution ≥ 15 bit	4 µs
Monoflop time		≤ 15 µs

Note: If the clock starts cycling within the monoflop time, a second data transfer starts with the same data. If the clock starts cycling after the monoflop time, the data transfer starts with the new values. The update rate is dependent on the clock speed, data length and monoflop-time.

BiSS interface

Output driver		RS485 transceiver type
Permissible load / channel		max. +/- 20 mA
Signal level	HIGH	typ. 3.8 V
	LOW at I_{Load} = 20 mA	typ. 1.3 V
Resolution		10 ... 14 bit and 17 bit
Code		binary
Clock rate		up to 10 MHz
Max. update rate		< 10 µs, depends on the clock rate and the data length
Data refresh rate	ST resolution ≤ 14 bit	≤ 1 µs
	ST resolution 17 bit	2.4 µs

Note:
- bidirectional, factory programmable parameters are: resolution, code, direction, alarms and warnings
- CRC data verification

SinCos interface

Max. frequency -3dB	400 kHz
Signal level	1 Vpp (±10 %)
Short circuit proof	yes [2]
Pulse rate	2048 ppr

LED

The optional LED (red) serves to display various alarm or error messages.
In normal operation the LED is OFF.

If the LED is ON (status output LOW) this indicates:
- sensor error, singleturn or multiturn (soiling, glass breakage etc.)
- LED error, failure or ageing
- Over- or under-temperature

In the SSI mode, the fault indication can only be reset by switching off the supply voltage to the device.

1) The specified value is based on a diagnostic coverage of 90 %, that must be achieved with an encoder evaluation unit.
The encoder evaluation unit must meet at least the requirements for SIL2.

2) Short circuit to 0 V or to output, one channel at a time, supply voltage correctly applied.
3) Cable version: -30 °C ... +90 °C [-22 °F ... +194 °F].

© Fritz Kübler GmbH, subject to errors and changes. 03/2023

Standard
SIL2/PLd, optical

Sendix 5853FS2 / 5873FS2 (shaft / hollow shaft)

SSI / BiSS + SinCos

SET input or SET button

Input		HIGH active
Input type		comparator
Signal level	HIGH LOW	min: 60 % of +V, max: +V max: 25 % of +V (supply voltage)
Input current		< 0.5 mA
Min. pulse duration (SET)		10 ms
Timeout after SET signal		14 ms

The encoder can be set to zero at any position by means of a HIGH signal on the SET input or by pressing the optional SET button (with a pencil, ball-point pen or similar). Other preset values can be factory-programmed.
The SET input has a signal delay time of approx. 1 ms. Once the SET function has been triggered, the encoder requires an internal processing time of approx. 15 ms before the new position data can be read. During this time the LED is ON.

If this input is not used, it should be connected to 0 V (Encoder ground GND) in order to avoid interferences.

DIR input

Direction input: A HIGH signal switches the direction of rotation from the default cw to ccw. This function can also be factory-programmed to be inverted. If DIR is changed when the device is already switched on, then this will be interpreted as an error.
The LED will come ON and the status output will switch to LOW.

If this input is not used, it should be connected to 0 V (Encoder ground GND) in order to avoid interferences.

Response time (DIR input)	1 ms

Power-ON

After Power-ON the device requires a time of approx. 150 ms before valid data can be read.

Hot plugging of the encoder should be avoided.

Approvals

UL compliant in accordance with	File no. E224618
CE compliant in accordance with	
EMC Directive	2014/30/EU
RoHS Directive	2011/65/EU
ATEX Directive	2014/34/EU (for Ex 2/22 variants)
Machinery Directive	2006/42/EG
UKCA compliant in accordance with	
EMC Regulations	S.I. 2016/1091
RoHS Regulations	S.I. 2012/3032
UKEX Regulations	S.I. 2016/1107 (for Ex 2/22 variants)
Machinery (Safety) Regulations	S.I. 2008/1597

Terminal assignment

Interface	Type of connection	Cable (isolate unused cores individually before initial start-up)													
3, 4	1, 2, A, B, E, F	Signal:	0 V	+V	C+	C-	D+	D-	SET	DIR	A	$\overline{A}$	B	$\overline{B}$	⏚
		Core color:	WH	BN	GN	YE	GY	PK	BU	RD	BK	VT	GY-PK	RD-BU	shield

Interface	Type of connection	M23 connector, 12-pin													
3, 4	3, 4	Signal:	0 V	+V	C+	C-	D+	D-	SET	DIR	A	$\overline{A}$	B	$\overline{B}$	⏚
		Pin:	1	2	3	4	5	6	7	8	9	10	11	12	PH

+V: Supply voltage encoder +V DC
0 V: Supply voltage encoder ground GND (0 V)
C+, C-: Clock signal
D+, D-: Data signal
SET: Set input
DIR: Direction input
A, $\overline{A}$: Cosine signal
B, $\overline{B}$: Sine signal
PH ⏚: Plug connector housing (shield)

Top view of mating side, male contact base

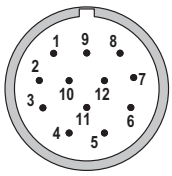

M23 connector, 12-pin

© Fritz Kübler GmbH, subject to errors and changes. 03/2023

Standard
SIL2/PLd, optical

Sendix 5853FS2 / 5873FS2 (shaft / hollow shaft)

SSI / BiSS + SinCos

Dimensions shaft version

Dimensions in mm [inch]

Clamping flange, ø 58 [2.28]
Flange type 1 + 3 with shaft type 2
(drawing with cable)

1 3 x M3, 6 [0.24] deep
2 3 x M4, 8 [0.32] deep

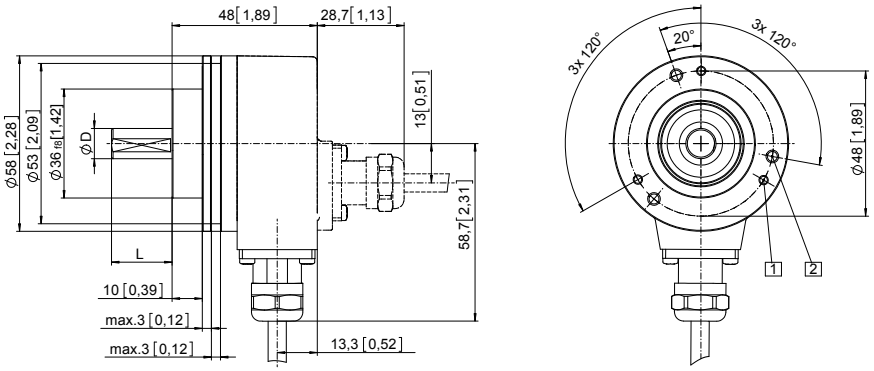

D	Fit	L
10 [0.39]	f7	20 [0.79]

Clamping flange, ø 58 [2.28]
Flange type 1 + 3 with shaft type A
(drawing with M23 connector)

1 3 x M3, 6 [0.24] deep
2 3 x M4, 8 [0.32] deep
3 Feather key DIN 6885 - A - 3x3x6

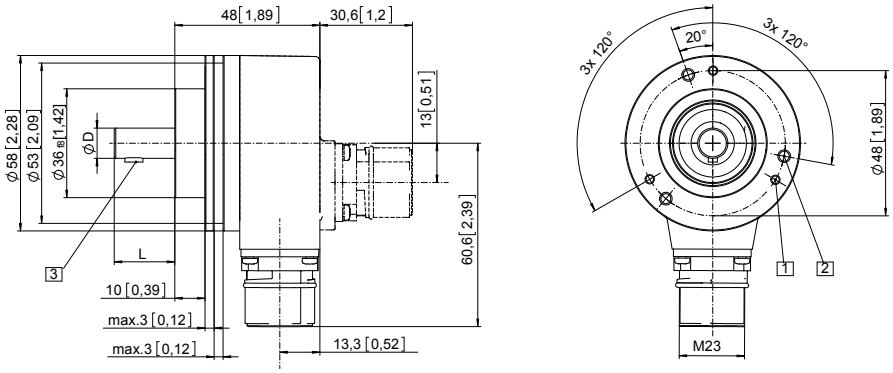

D	Fit	L
10 [0.39]	f7	20 [0.79]

© Fritz Kübler GmbH, subject to errors and changes. 03/2023

Standard
SIL2/PLd, optical

Sendix 5853FS2 / 5873FS2 (shaft / hollow shaft)

SSI / BiSS + SinCos

Dimensions hollow shaft version

Dimensions in mm [inch]

Flange with torque stop FS, rigid
Flange type A + K
Through hollow shaft
(drawing with cable)

1 SW 3, recommended torque for the clamping ring 2.5 Nm

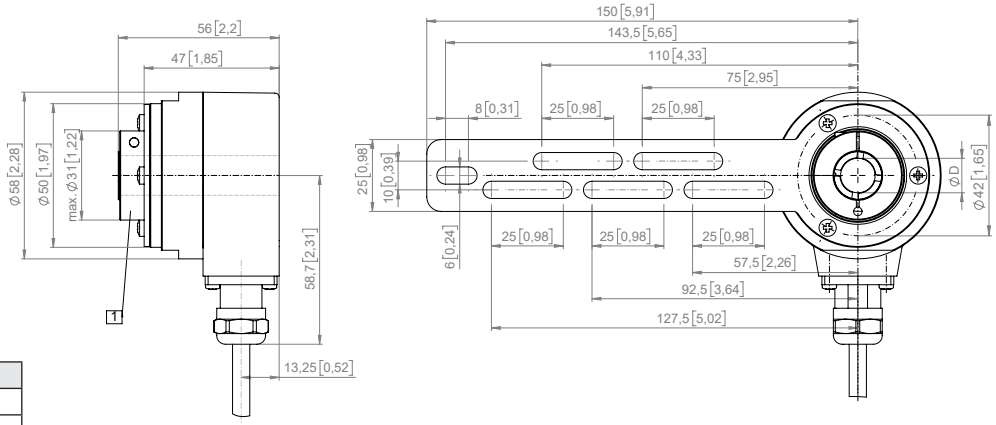

D	Fit
10 [0.39]	H7
12 [0.47]	H7
14 [0.55]	H7

Torque pin with rectangular sleeve with M4 thread

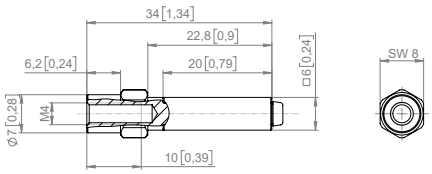

Flange with torque stop FS, flexible
Flange type 9 + J
Through hollow shaft
(drawing with M23 connector)

1 Recommended torque for the clamping ring 2.5 Nm

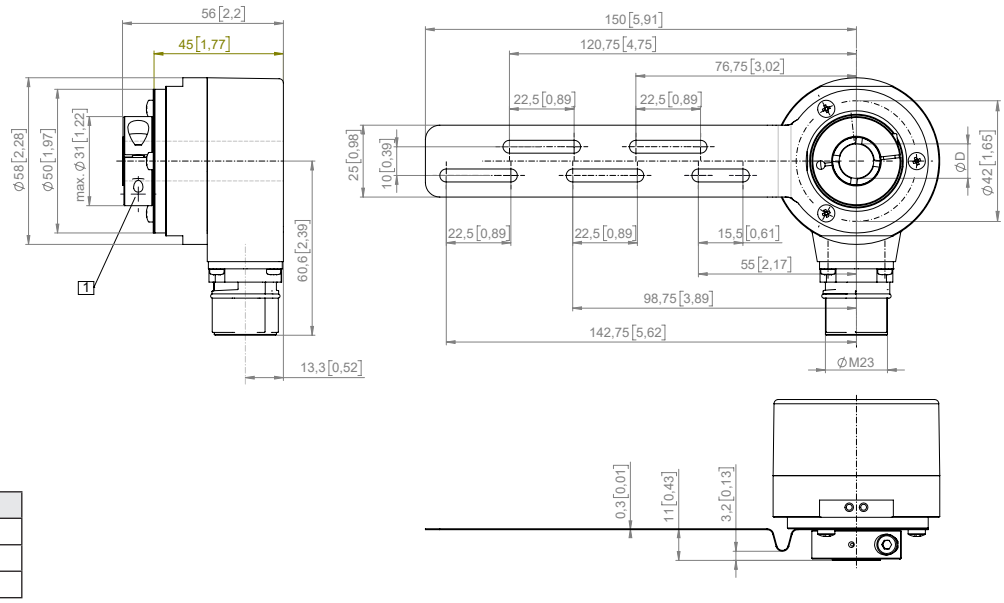

D	Fit
10 [0.39]	H7
12 [0.47]	H7
14 [0.55]	H7

© Fritz Kübler GmbH, subject to errors and changes. 03/2023

Standard
SIL2/PLd, optical

Sendix 5853FS2 / 5873FS2 (shaft / hollow shaft)

SSI / BiSS + SinCos

Dimensions hollow shaft version

Dimensions in mm [inch]

Flange with stator coupling FS, ø 63 [2.48]
Flange type B + L
Through hollow shaft
(drawing with M23 connector)

1 SW 3, recommended torque for the clamping ring 2.5 Nm
2 For (4x) M3 screw

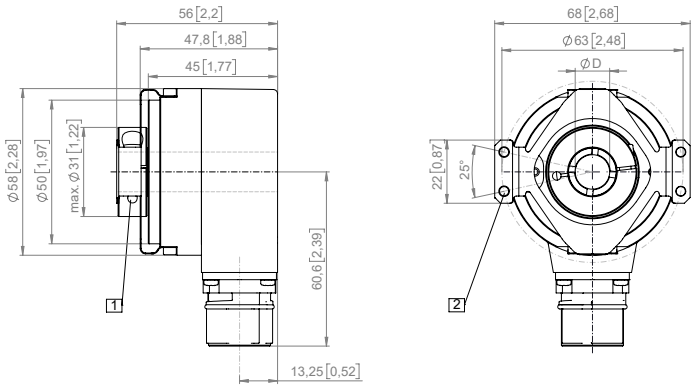

D	Fit
10 [0.39]	H7
12 [0.47]	H7
14 [0.55]	H7

Flange with stator coupling FS, ø 63 [2.48]
Flange type B + L
Tapered shaft
(drawing with tangential cable outlet)

1 For (4x) M3 screw
2 Status-LED
3 SET button
4 Recommended torque for central screw M5 (SW 4) 3.0 $^{+0.5}$ Nm (tapered shaft)

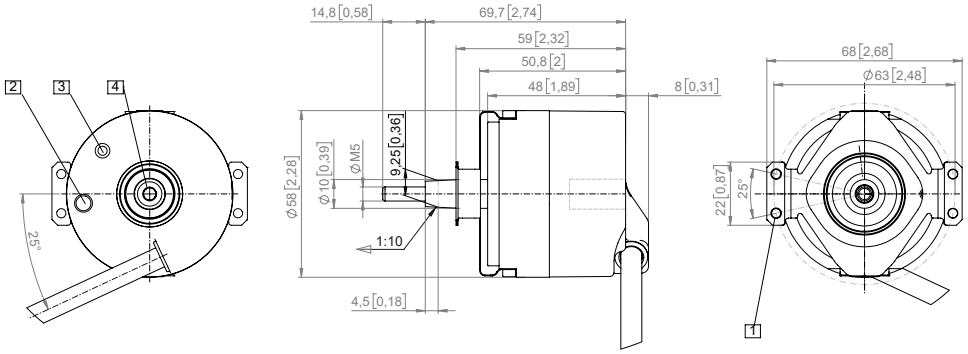

© Fritz Kübler GmbH, subject to errors and changes. 03/2023