# E21255

## Mounting set for photoelectric sensors

MOUNTING SET FOR O5 ROD

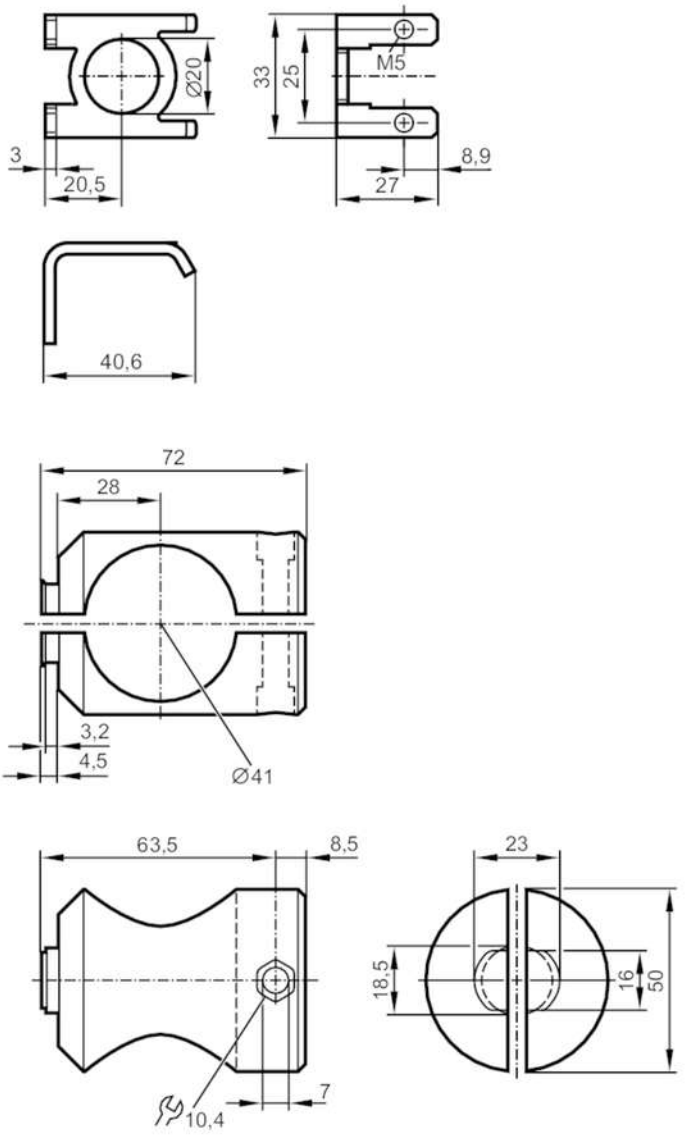


| | | |
|---|---|---|
| **Application** | | |
| Design | | clamp mounting |
| **Mechanical data** | | |
| Weight | [g] | 236.5 |
| Type of mounting | | Mounting rod; (Ø 40 mm) |
| Materials | | fixture: stainless steel (1.4571/316Ti ); Clamp: aluminium uncoloured anodised |
| **Accessories** | | |
| Items supplied | | socket head screw: 1 x M6 x 40 |
| | | socket head screws: 2 x M5 x 8 |
| | | Hexagon nut: 1 x M6 |
| **Remarks** | | |
| Pack quantity | | 1 pcs. |