E43107

Screw-in adapter for process sensors

ADAPT G1 - 1 1/2 NPT

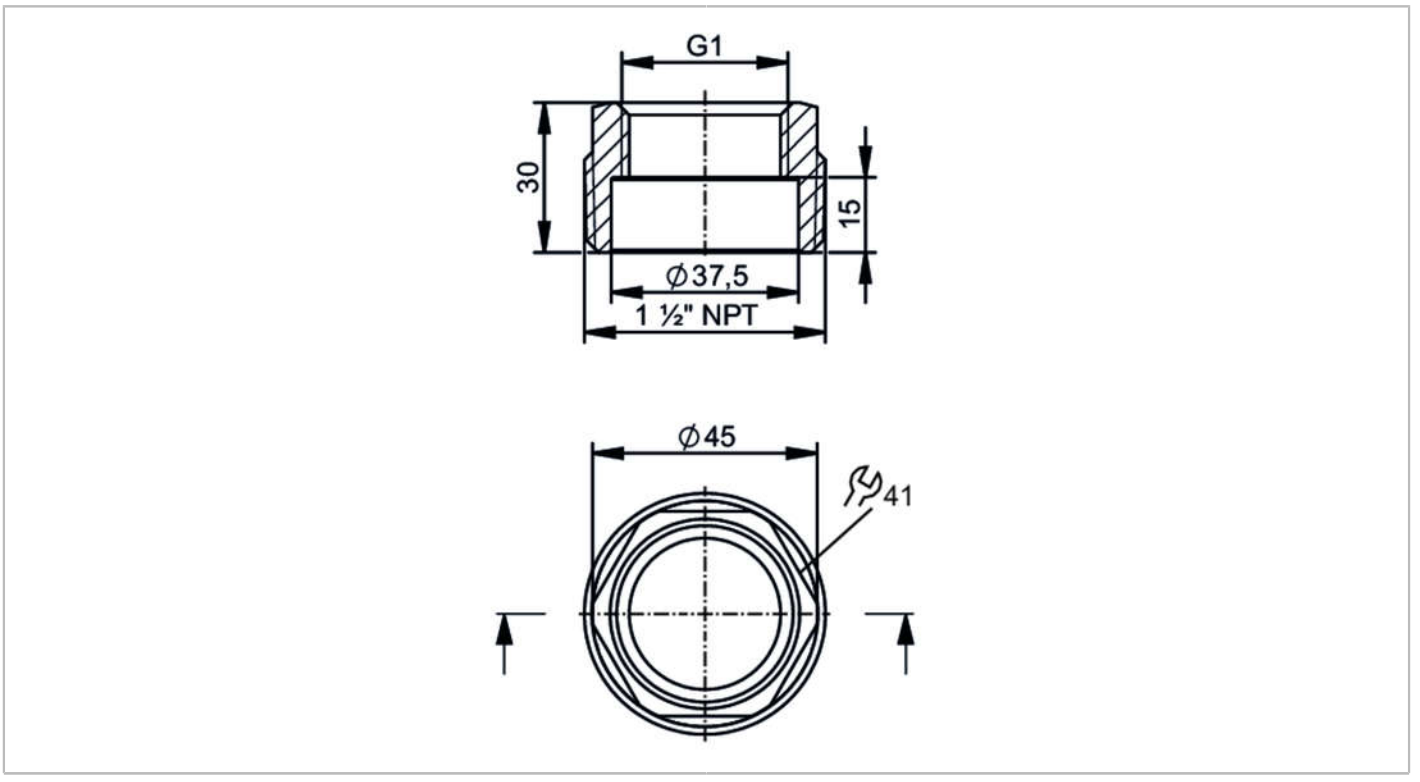

Application		
Design		for sensor LW2120
Pressure rating	[bar]	50
Note on pressure rating		for the connection sensor - adapter
Tests / approvals		
Pressure Equipment Directive		A possible classification to PED depends on the application and has to be carried out by the user / operator.
Pressure Equipment Directive EAC		The adapter is intended for use in devices, machines and installations that do not fall under the categories of the technical rule TR CU 032/2013.
Safety instructions		The compatibility between medium and product material has to be checked in all applications.
Mechanical data		
Weight	[g]	194.5
Materials (wetted parts)		stainless steel (1.4404 / 316L)
Sensor connection		G 1
Process connection		threaded connection 1 1/2" NPT
Remarks		
Pack quantity		1 pcs.