268 HANDHELD CASES
292 UNIVERSAL PLASTIC ENCLOSURES
317 HEAVY DUTY AND ELECTRICAL ENCLOSURES
341 DEVELOPMENT BOARD ENCLOSURES
369 VERSATILE IOT AND SENSOR ENCLOSURES

2950 Series ABS Handheld Enclosure

Product overview

Low-profile enclosures with battery compartment and interchangeable front panel for test and measurement equipment, remote controls and wireless technology.

- Moulded in high impact ABS or UL94-V0 ABS
- Low profile moulding
- Pocket sized cases
- Recesses top and base
- Snap-on battery compartment
- PCB pillars in lid and base
- 2950 series has been designed to meet the requirements of IP54







SPECIFICATION		
Materials	2950 - 39 2950 - 39UL 2950 - 89	High impact ABS UL94-V0 ABS High impact ABS
Protection class	2950 series has been designed to meet the requirements of IP54	
Standard colours	Light grey similar to RAL 9002 Black similar to RAL 9004	
Standard unit includes	Base and lid ABS front panel 4x M3 machine screws	
Options	Battery contact kit	

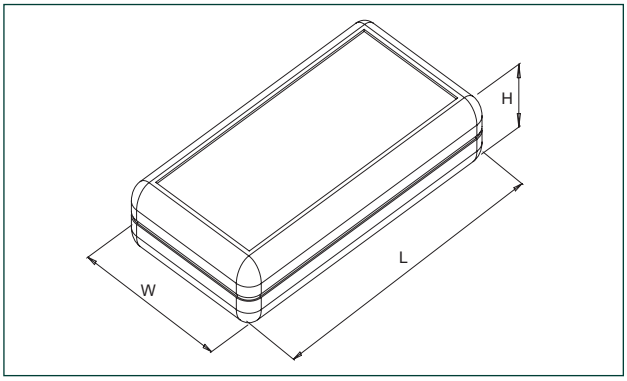

BLACK	LIGHT GREY	LENGTH	WIDTH	HEIGHT	MATERIAL	STYLE
2950-39B	2950-39G	135mm	70mm	24mm	ABS	Battery compartment
2950-39BUL	2950-39GUL	135mm	70mm	24mm	ABS	Battery compartment
-	2950-89G	172mm	77mm	25mm	ABS	-

KEY FEATURES

High impact ABS, UL94-V0 | Pocket sized cases | PCB pillars

ACCESSORIES

Battery contact kit

- AA size battery contact kit push-fit into pre-moulded pillars inside the case



PART NO.	DESCRIPTION
2950-310	Battery contact kit