Draw-wire encoder D120 | Robust-Line | Measuring length max. 10 m



With their extremely robust construction, their high IP69k protection level and their wide temperature range up to -40 °C ... +85 °C the D120 draw-wire encoders are specially developed for outdoor applications.

Their flexibility and adaptability reflects in the wide range of housing and wire types, the long measuring range and the various interfaces. The possibility of redundancy must be particularly pointed out.

RoHS | Analog output | CANopen

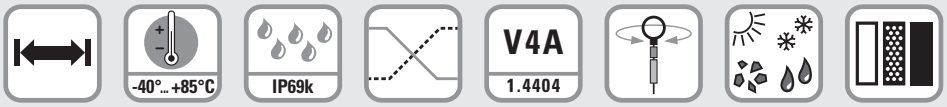

Long service life | Wide temperature range | High protection level | Redundancy | V4A | Integrated swivel | For outdoor applications | 3 housing types

Robust

- Protection level up to IP69k and wide temperature range up to -40 °C ... +85 °C.
- The titanium-anodized aluminum housing and the stainless steel wires allow using the mechanics even in harsh conditions.
- Wire diameter (stainless steel, V4A) up to ø 1.5 mm - ideal for outdoor applications.

Versatile

- Measuring length up to 10 m.
- Redundant outputs (mA, V, R, CANopen).
- The right measuring wire and the right wire fastening for every application.
- Linearity up to ±0.1 % of the measuring range.
- Various constructions: open, closed housing or housing with perforated sheet steel cover.

Order code

D8.D120	.	X	X	X	X	.	XXX	X	.	0000
Type		a	b	c	d		e	f		

See also the extended ordering options on page 6

a *Measuring length*
3 = 3 m
4 = 4 m
5 = 5 m
6 = 6 m
7 = 7 m
8 = 8 m
9 = 9 m
A = 10 m

b *Wire types* [1]
1 = V4A, ø 0.5 mm
2 = V4A, ø 1.0 mm (measuring length 3 ... 8 m)
3 = V4A, ø 1.5 mm (measuring length 3 ... 6 m)

c *Linearity*
1 = standard linearity 0.5 %
2 = improved linearity 0.25 %
3 = improved linearity 0.1 %

d *Housing*
1 = open housing, open wire guide
3 = with perforated sheet metal cover open wire guide
4 = with perforated sheet metal cover closed wire guide
6 = closed housing, closed wire guide

e *Single sensor / Supply voltage*
A11 = 4 ... 20 mA / 12 ... 30 VDC
A22 = 0 ... 10 V / 12 ... 30 VDC
A33 = 1 kΩ / max. 30 VDC
CC1 = CANopen / 8 ... 30 VDC

Redundant sensors / Supply voltage
R11 = 2 x 4 ... 20 mA / 12 ...30 VDC
R22 = 2 x 0 ... 10 V / 12 ... 30 VDC
R33 = 2 x 1 kΩ / max. 30 V
RC1 = 2 x CANopen / 8 ... 30 VDC

f *Type of connection / protection level sensor*
Cable connection, standard lengths [2]
1 = radial cable, 2 m [6.56'] TPE / IP69k
2 = radial cable, 2 m [6.56'] TPE / IP67
C = radial cable, 5 m [16.40'] TPE / IP69k
E = radial cable, 5 m [16.40'] TPE / IP67
D = radial cable, 10 m [32.81'] TPE / IP69k
F = radial cable, 10 m [32.81'] TPE / IP67
Connector
3 = radial M12 connector / IP67
4-pin for sensor type A11 ... A33
5-pin for sensor type CC1 ... RC1
8-pin for sensor type R11 ... R33

Relationship measuring length – wire types – linearity

Measuring length [m] / order code a	3 / 4 / 5 / 6 (3 / 4 / 5 / 6)			7 / 8 (7 / 8)			9 / 10 (9 / A)		
Wire type ø [mm] / order code b	0.5 (1)	1.0 (2)	1.5 (3)	0.5 (1)	1.0 (2)	1.5 –	0.5 (1)	1.0 –	1.5 –
Standard linearity ±0.5 % (order code c = 1)	✓	✓	✓	✓	✓	–	✓	–	–
Improved linearity ±0.25 % (order code c = 2)	✓	✓	✓	✓	✓	–	✓	–	–
Improved linearity ±0.1 % (order code c = 3)	✓	✓	✓	✓	✓	–	✓	–	–

✓ feasible / – not feasible

1) Wire type availability depends on the selected measuring range, refer to the technical data.
2) Other cable length on request.

© Fritz Kübler GmbH, subject to errors and changes. 02/2023

Draw-wire encoder D120 | Robust-Line | Measuring length max. 10 m

Accessories for draw-wire encoder	Dimensions in mm [inch]	Order no.
Guide pulley for wire type 1 (0.5 mm)	Technical data: - mounting bracket (anodized alum.) - guide pulley (plastic POM) - ball bearing (type 696-2R5) Scope of delivery: - 2 x countersunk screws for lateral fixing - 2 x hexagonal screws for fixing on a flat surface	**8.0000.7000.0045**
Extension cable (further on request)	0.5 m with clip 1.0 m with clip 2.0 m with clip	**8.0000.7000.0051** **8.0000.7000.0052** **8.0000.7000.0054**



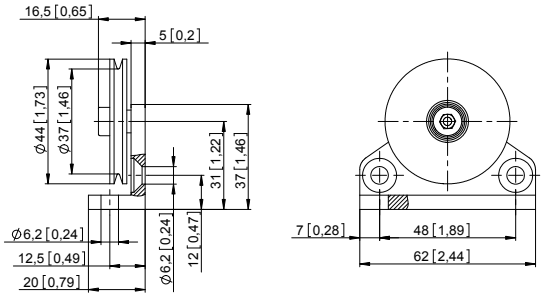



Cables and connectors		Order no.
Preassembled cables	M12 female connector with coupling nut, 4-pin, A coded, straight single ended 2 m [6.56'] PUR cable	**05.00.6061.6211.002M**
	M12 female connector with coupling nut, 5-pin, A coded, straight single ended 2 m [6.56'] PVC cable	**05.00.6081.2211.002M**
	M12 female connector with coupling nut, 8-pin, A coded, straight single ended 2 m [6.56'] PVC cable	**05.00.6041.8211.002M**
Connectors	M12 female connector with coupling nut, 4-pin, A coded, straight (plastic)	**05.B8141-0**
	M12 female connector with coupling nut, 5-pin, A coded, straight (metal/plastic)	**05.B-8151-0/9**
	M12 female connector with coupling nut, 8-pin, A coded, straight (metal)	**05.CMB 8181-0**

Further Kübler cables and connectors can be found at: kuebler.com/connection-technology

© Fritz Kübler GmbH, subject to errors and changes. 02/2023

Draw-wire encoder D120 | Robust-Line | Measuring length max. 10 m

Technical data

General technical data

Linearity		±0.5 %
Improved linearity		±0.25 % or ±0.1 %
Resolution		see electrical characteristics
Sensor element		potentiometer
Output signal (others on request)		4 ... 20 mA, 0 ... 10 V, potentiometer, CANopen
Connection		radial M12 connector or radialer cable outlet (TPE cable), standard length 2, 5, 10 m
Protection	M12 connector	IP67
	cable	IP67, IP69k
Humidity		max. 90 % relative, no condensing
Working temperature	standard	-20 °C ... +85 °C [-4 °F ... +185 °F]
	as extended order option (s.page 6)	-40 °C ... +85 °C [-40 °F ... +185 °F]
Speed max.		3.0 m/s
Acceleration max.		50 m/s²
Weight		1300 ... 1600 g [45.87 ... 56.44 oz] depending on measuring range
Housing		aluminum, spring housing PA6
Spring force		min. 7 N / max. 13 N [1)]

Interface characteristics CANopen – Sensor type CC1, RC1

CAN specification	Full CAN 2.0B (ISO11898)
Communication profile	CANopen CiA 301 V 4.2.0
Device profile	encoder, absolute linear; CiA 406 V 3.2.0
Error monitoring	Producer Heartbeat, Emergency Message, Node Guarding
Node ID	default: 7, adjustable via SDO
PDO	1 x TPDO, static mapping
PDO functions	event-triggered, time-triggered, Sync-cyclic, Sync-acyclic
Transmission rate	Default 250 kbit/s, 1 Mbps, 800, 500, 250, 125, 50, 20 kbps adjustable via SDO
Bus connection	M12 connector, 5-pin or axial cable outlet (TPE cable), standard length 2 m
Integrated bus terminating resistor	120 ohms ready-to-activate via SDO
Bus, galvanic isolation	no
Supply voltage	8 ... 30 V DC
Current consumption	typ. 10 mA at 24 V, typ. 20 mA at 12 V
Measuring rate	1 kHz with 16 bit resolution
Resolution	0.002 % of the measuring range
Electrical protection	reverse polarity protection

Electrical characteristics (analog sensor, scaled to measuring range)

Sensor type	**A11 / R11**	**A22 / R22**	**A33 / R33**
Output	4 ... 20 mA	0 ... 10 V	1 kΩ, potentiometer
Output current	max. 50 mA in case of a failure	max. 10 mA, min. load 10 kΩ	–
Max. current consumption	–	22.5 mA (non load)	–
Supply voltage	12 ... 30 V DC	12 ... 30 V DC	max. 30 V DC
Response time	< 1 ms from 0 ... 100 % and 100 ... 0 %	< 3 ms from 0 ... 100 % and 100 ... 0 %	–
Resolution	limited by the noise	limited by the noise	theoretically unlimited
Noise	0.03 mA_{pp} = 6 mV_{pp} at 200 Ω	typ. 3 mV_{pp}, max. 37 mV_{pp}	depending on the supply voltage
Recommended slider current	–	–	< 1 µA
Reverse polarity protection	yes	yes	–
Short circuit proof	–	yes, sustained short-circuit proof	–
Temperature coefficient	0.0079 %/K	0.0037 %/K	±0.0025 %/K

Characteristics measuring wire (plastic coated)

V4A, ø 0.5 mm	measuring range	3 ... 10 m
	no.	1.4401
	breaking force	262 N
	TK	16 x 10^{-6} K^{-1}
V4A, ø 1.0 mm	measuring range	3 ... 8 m
	no.	1.4401
	breaking force	942 N
	TK	16 x 10^{-6} K^{-1}
V4A, ø 1.5 mm	measuring range	3 ... 6 m
	no.	1.4401
	breaking force	1.890 N
	TK	16 x 10^{-6} K^{-1}

Approvals

Electromagnetic compatibility	acc. to EN 61326-1, EN 61326-3-1
CE compliant in accordance with	
EMC Directive	2014/30/EU
RoHS Directive	2011/65/EU
UKCA compliant in accordance with	
EMC Regulations	S.I. 2016/1091
RoHS Regulations	S.I. 2012/3032

1) Depends on the measuring length.

© Fritz Kübler GmbH, subject to errors and changes. 02/2023

Draw-wire encoder D120 | Robust-Line | Measuring length max. 10 m

Terminal assignment

Analog sensor **A11** (4 ... 20 mA)			R/I converter								
		Signal:	+V	n.c.	I_{out}	n.c.					
	Cable [1]	Core color:	BN	WH	BU	BK					
	M12 connector, 4-pin	Pin:	1	2	3	4					
Analog sensor **R11**, redundant (2 x 4 ... 20 mA)			R/I converter 1		R/I converter 2						
		Signal:	$+V_1$	$I_{out\ 1}$	$+V_2$	$I_{out\ 2}$	n.c.	n.c.	n.c.	n.c.	
	Cable [1]	Core color:	WH	GN	GY	BU	BN	YE	PK	RD	
	M12 connector, 8-pin	Pin:	1	3	5	7	2	4	6	8	

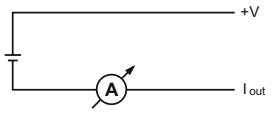

Analog sensor **A22** (0 ... 10 V DC)			R/U converter								
		Signal:	+V	U_{out}	0 V	$0\ V_{out}$					
	Cable [1]	Core color:	BN	WH	BU	BK					
	M12 connector, 4-pin	Pin:	1	2	3	4					
Analog sensor **R22**, redundant (2 x 0 ... 10 V DC)			R/U converter 1				R/U converter 2				
		Signal:	$+V_1$	$U_{out\ 1}$	$0\ V_1$	$0\ V_{out\ 1}$	$+V_2$	$U_{out\ 2}$	$0\ V_2$	$0\ V_{out\ 2}$	
	Cable [1]	Core color:	WH	BN	GN	YE	GY	PK	BU	RD	
	M12 connector, 8-pin	Pin:	1	2	3	4	5	6	7	8	

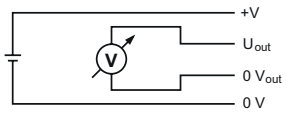

Analog sensor **A33** (Potentiometer 1 kΩ)			Potentiometer								
		Signal:	+V	Out	0 V	n.c.					
	Cable [1]	Core color:	BN	WH	BU	BK					
	M12 connector, 4-pin	Pin:	1	2	3	4					
Analog sensor **R33**, redundant (2 x Potentiometer 1 kΩ)			Potentiometer 1				Potentiometer 2				
		Signal:	$+V_1$	Out_1	$0\ V_1$	n.c.	$+V_2$	Out_2	$0\ V_2$	n.c.	
	Cable [1]	Core color:	WH	BN	GN	YE	GY	PK	BU	RD	
	M12 connector, 8-pin	Pin:	1	2	3	4	5	6	7	8	

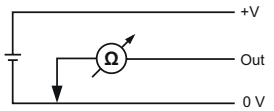

Digital sensor **CC1** (CANopen)			CANopen				
		Signal:	+V	0 V	CAN_GND	CAN_H	CAN_L
	Cable [1]	Core color:	WH	BU	BN	BK	GY
	M12 connector, 5-pin	Pin:	2	3	1	4	5
Digital sensor **RC3**, redundant (2 x CANopen)			CANopen 1 + CANopen 2				
		Signal:	+V	0 V	CAN_GND	CAN_H	CAN_L
	Cable [1]	Core color:	WH	BU	BN	BK	GY
	M12 connector, 5-pin	Pin:	2	3	1	4	5

Top view of mating side, male contact base

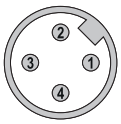

M12 connector, 4-pin

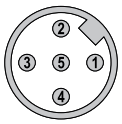

M12 connector, 5-pin



M12 connector, 8-pin

1) Isolate unused cores individually before initial start-up.

© Fritz Kübler GmbH, subject to errors and changes. 02/2023

Draw-wire encoder D120 | **Robust-Line** | **Measuring length max. 10 m**

Technology in detail

Operating principle

Construction
The core of a draw-wire device is a drum mounted on bearings, onto which a wire is wound.
Winding takes place via a spring-loaded device. The single-layer wire winding ensuring the best linearity possible is a specific feature of Kübler draw-wire encoders.

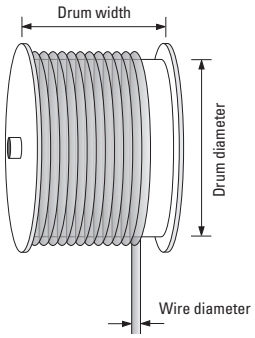

Note
Exceeding the maximum extension length of the draw-wire will lead to damage to the wire and the mechanics.

Wire fastenings

Carabiner ring	M4 thread [1]	eyelet	clip
D8.D120.xxxx.xxxx.xxxx	D8.D120.xxxx.xxxx.xxxx.**V001**	D8.D120.xxxx.xxxx.xxxx.**V002**	D8.D120.xxxx.xxxx.xxxx.**V007**

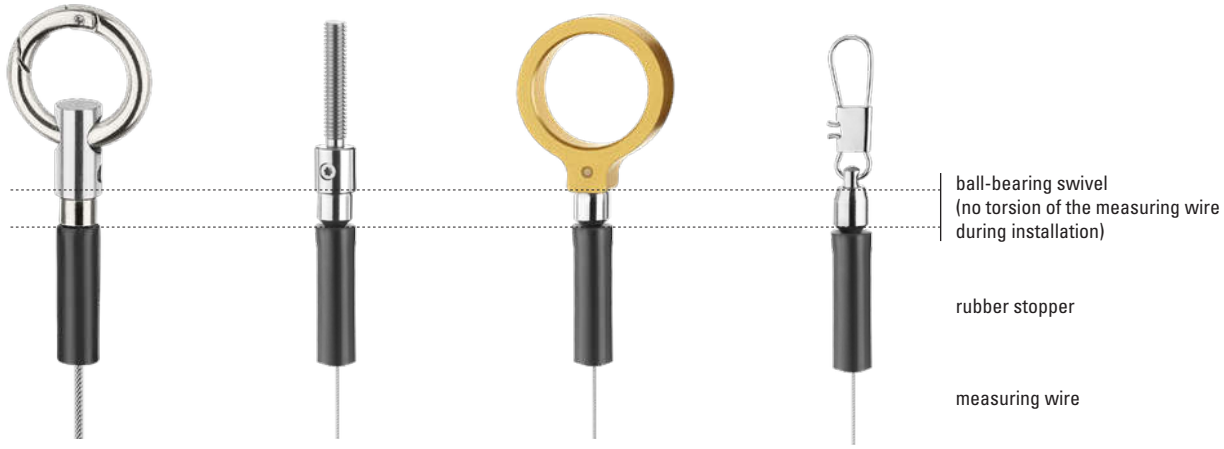

Wire types

- V4A, ø 0.5 mm, order option ⓑ = 1
- V4A, ø 1.0 mm, order option ⓑ = 2
- V4A, ø 1.5 mm, order option ⓑ = 3

Ideally suited for long-term outdoor use.



Extension wire

For optimum use of the measuring range by extending the wire length, e. g. to allow realizing a pre-extension in the application.
Especially combined with analog interfaces
(options A11, A22, A33 and R11, R22, R33).



Extended temperature range -40 °C ... +85 °C

(only in combination with the standard linearity 0.5 %)

By using special components.
Order code extensions for the extended temperature range:

With carabiner ring:	D8.D120.xxxx.xxxx.xxxx.**V003**
With M4 thread [1]:	D8.D120.xxxx.xxxx.xxxx.**V004**
With eyelet :	D8.D120.xxxx.xxxx.xxxx.**V005**
With clip:	D8.D120.xxxx.xxxx.xxxx.**V008**

Application-specific installation possibilities

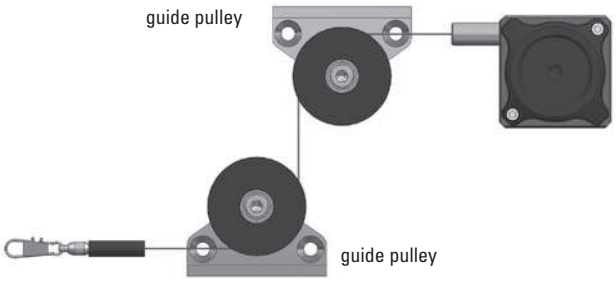

1) Not available with wire type V4A, ø 1.5 mm – order option ⓑ = 3.

© Fritz Kübler GmbH, subject to errors and changes. 02/2023

Draw-wire encoder D120 | **Robust-Line** | **Measuring length max. 10 m**

Technology in detail

Housing types (the suitable housing type for every application)

Open housing, open wire guide

For use in the presence of fine dust and liquids.

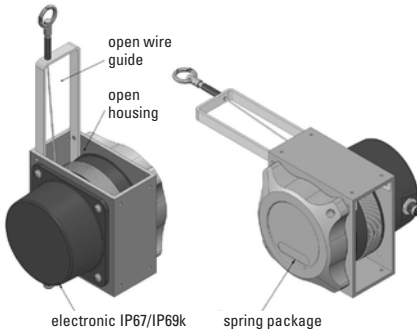

Housing with perforated sheet metal cover, closed wire guide

For use in the presence of dirt, particles size > 2 mm and liquids.
Shock protection, wire cleaning device (in preparation).

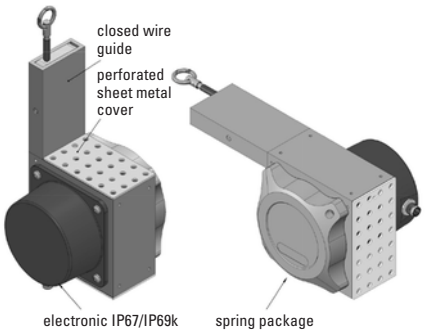

Housing with perforated sheet metal cover, open wire guide

For use in the presence of dirt, particles size > 2 mm and liquids

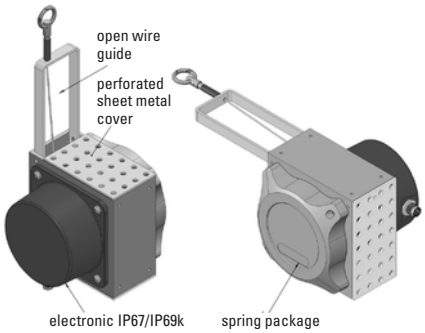

Closed housing, closed wire guide

For use in the presence of sticky dust, cement, concrete, clay.
Shock protection, wire cleaning device (in preparation).

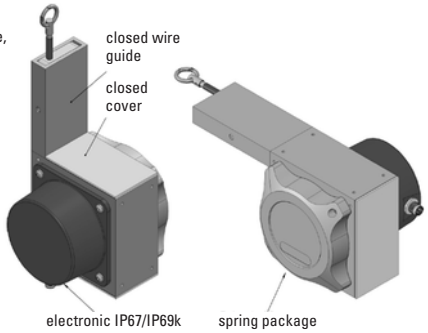

© Fritz Kübler GmbH, subject to errors and changes. 02/2023

Draw-wire encoder D120 | **Robust-Line** | **Measuring length max. 10 m**

Dimensions

Dimensions in mm [inch]

Open housing,
open wire guide

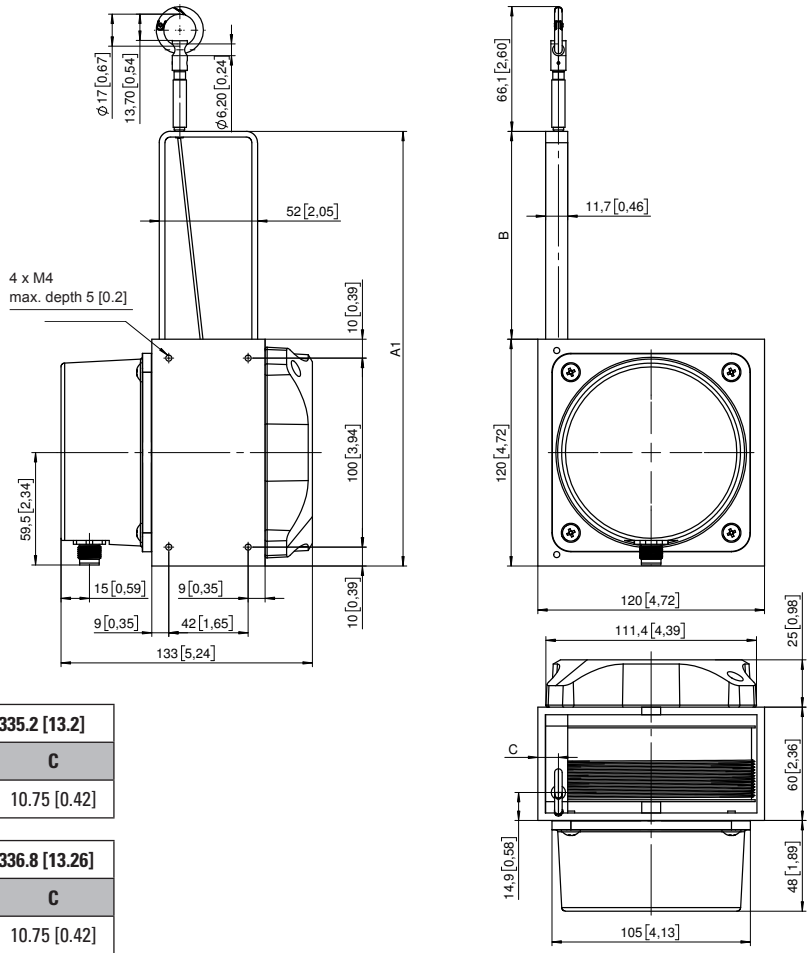

Wire diameter ø 0.5 mm – drum pitch circumference: 335.2 [13.2]			
Measuring length	**A1**	**B**	**C**
3 ... 10 m	230 [9.06]	110 [4.33]	10.75 [0.42]

Wire diameter ø 1.0 mm – drum pitch circumference: 336.8 [13.26]			
Measuring length	**A1**	**B**	**C**
3 ... 5 m	230 [9.06]	110 [4.33]	10.75 [0.42]
6 ... 8 m	320 [12.6]	200 [7.87]	12.25 [0.48]

Wire diameter ø 1.5 mm – drum pitch circumference: 338.3 [13.32]			
Measuring length	**A1**	**B**	**C**
3 ... 4 m	230 [9.06]	110 [4.33]	10.75 [0.42]
5 ... 6 m	320 [12.6]	200 [7.87]	12.25 [0.48]

Connector output / Cable outlet

The cable must be protected in case of steam and high-pressure cleaning.

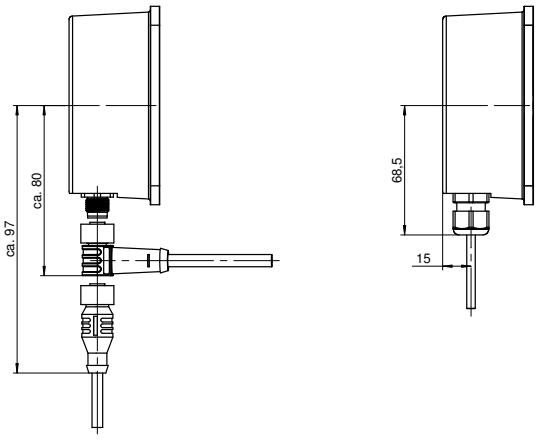

© Fritz Kübler GmbH, subject to errors and changes. 02/2023

Draw-wire encoder D120 | Robust-Line | Measuring length max. 10 m

Dimensions

Dimensions in mm [inch]

Housing with perforated sheet metal cover, closed wire guide

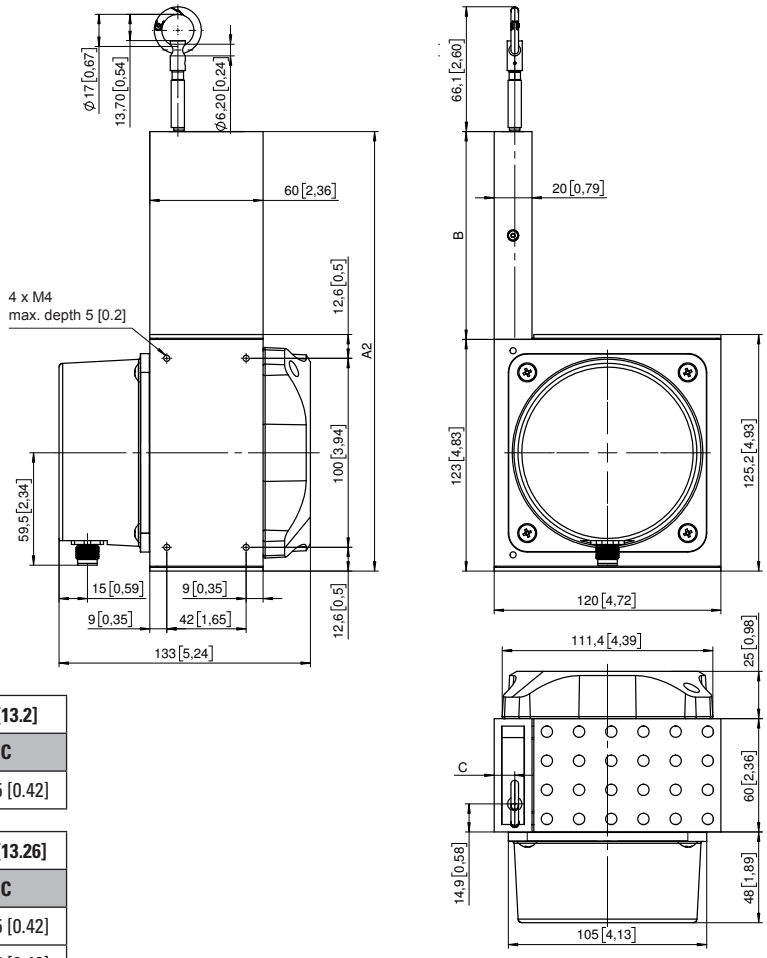

Wire diameter ø 0.5 mm – drum pitch circumference: 335.2 [13.2]			
Measuring length	**A2**	**B**	**C**
3 ... 10 m	233 [9.17]	110 [4.33]	10.75 [0.42]

Wire diameter ø 1.0 mm – drum pitch circumference: 336.8 [13.26]			
Measuring length	**A2**	**B**	**C**
3 ... 5 m	233 [9.17]	110 [4.33]	10.75 [0.42]
6 ... 8 m	323 [12.7]	200 [7.87]	12.25 [0.48]

Wire diameter ø 1.5 mm – drum pitch circumference: 338.3 [13.32]			
Measuring length	**A2**	**B**	**C**
3 ... 4 m	233 [9.17]	110 [4.33]	10.75 [0.42]
5 ... 6 m	323 [12.7]	200 [7.87]	12.25 [0.48]

© Fritz Kübler GmbH, subject to errors and changes. 02/2023