E20056

Fibre optic diffuse reflection sensor

FT-00-A-A-E3

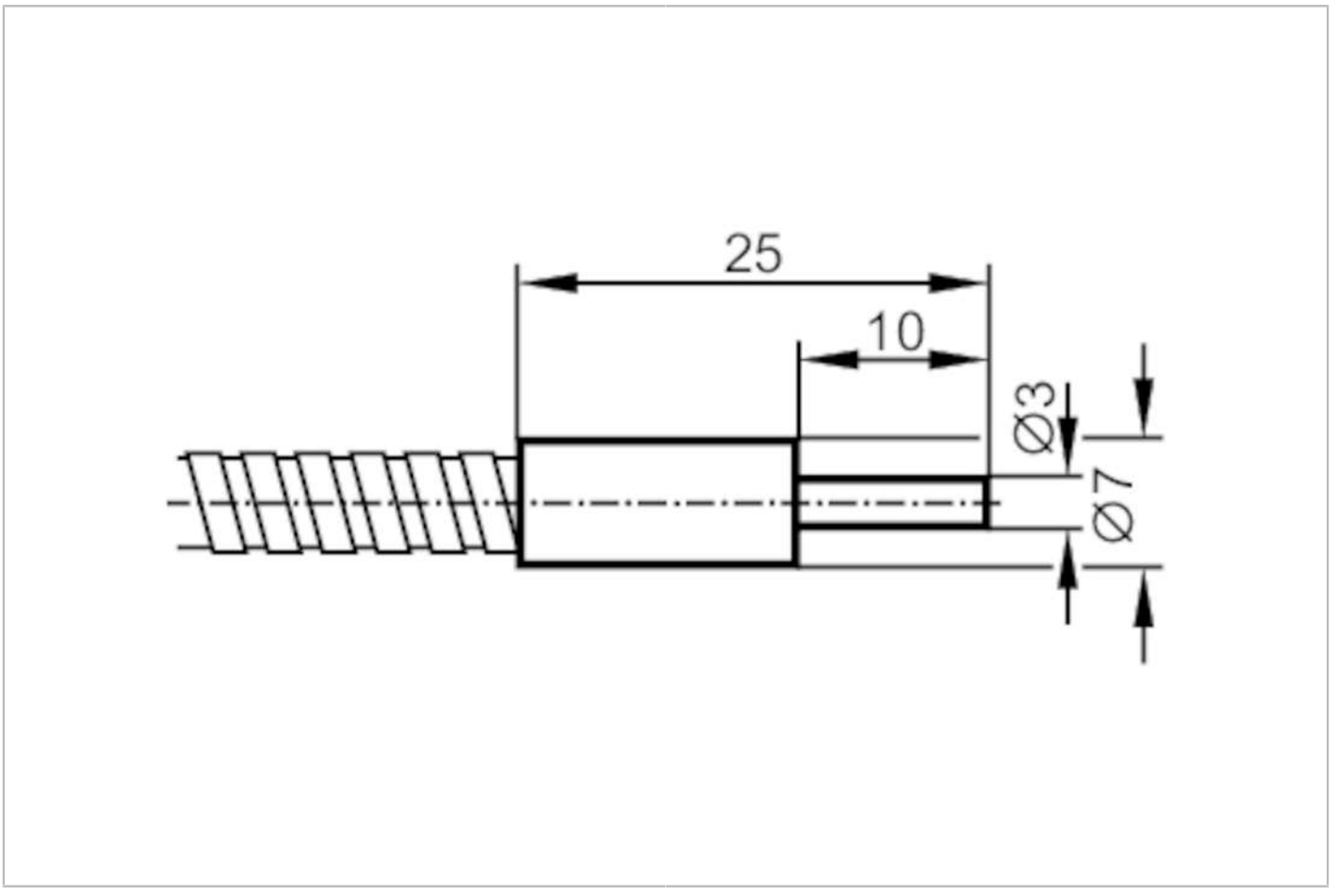

Application		
Function principle		Diffuse reflection sensor
Application		High temperature resistance; Robust design for use in harsh industrial environments
Detection zone		
Range with fibre optic amplifier type		OCF; OKF; OOF; OUF
OCF (High Power)		
Range fibre optics	[mm]	310
OKF		
Range fibre optics	[mm]	40
OOF		
Range fibre optics	[mm]	200
OUF		
Range fibre optics	[mm]	40
Operating conditions		
Ambient temperature	[°C]	-40...290
Mechanical data		
Weight	[g]	51.5
Version of sensing head		straight
Sensing head diameter	[mm]	3

E20056

Fibre optic diffuse reflection sensor

FT-00-A-A-E3

Total length	[mm]	600
Min. bending radius	[mm]	20; (for fixed installation)
Fibre arrangement		
Materials		Adapter: ABS
Fibre material		glass
Fibre head material		aluminium
Fibre sheath material		aluminium
Accessories		
Items supplied		E20102
Remarks		
Pack quantity		1 pcs.