Part Number: **BU-27/BU-27C**
Description: **General Purpose Clip**

4106

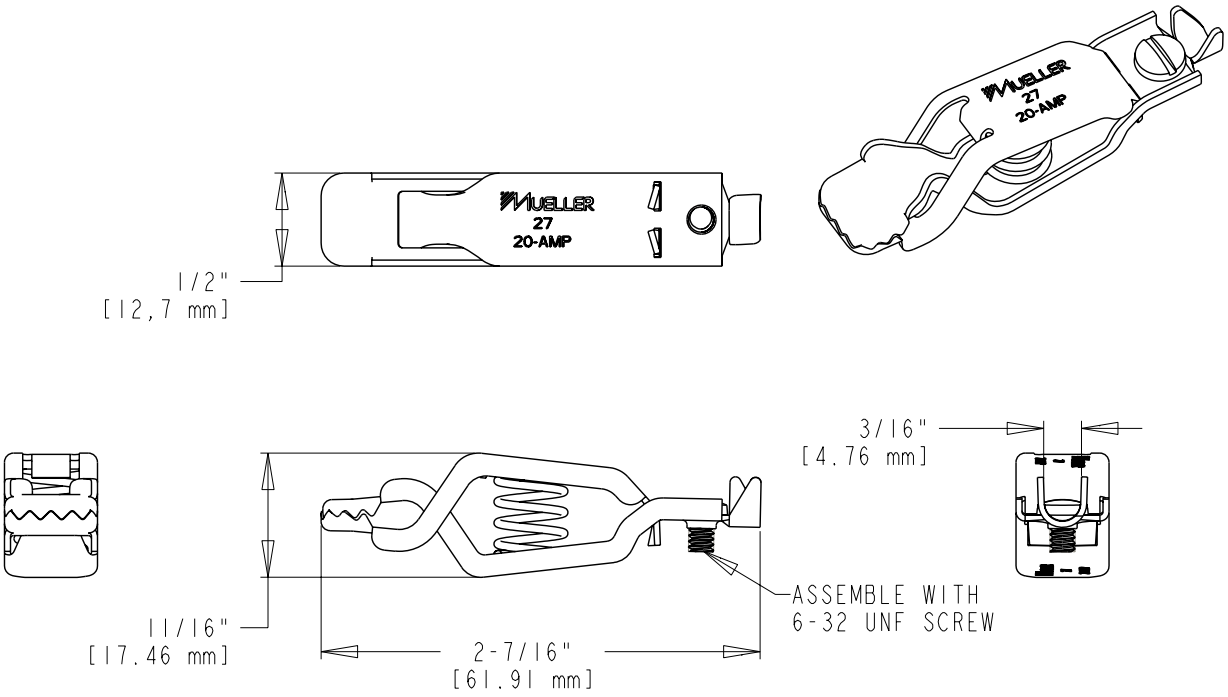

- General Purpose clip
- Can be attached by crimp or screw connection
- Material: BU-27 -- zinc-plated steel
  BU-27C -- solid copper
- Rating:
  - 20 Amps – BU-27
  - 40 Amps – BU-27C
- Use BU-29 PVC insulator for this clip
- Packaged in Bulk
- RoHS Compliant

Mueller Electric Company *ISO 9001:2000* *TEL. 800-955-2629*
1625 E. 31st Street *Over 95 Years Of Innovation* *TEL. 216-771-5225*
Cleveland, Ohio 44114 *www.muellerelectric.com* *FAX. 216-771-3068*