Data sheet

Electronic timer CT-SDD.22
Star-delta change-over with 2 n/o contacts

The CT-SDD.22 is an electronic time relay with star-delta change-over. It is from the CT-D range.

With their MDRC profile and a width of only 17.5 mm, the CT-D range timers are ideally suited for installation in distribution panels as well as for industrial applications where compact dimensions are required.



2CDC 251 099 F0006

Characteristics
- Rated control supply voltage 24-48 V DC, 24-240 V AC
- Single-function timer star-delta change-over
- 4 time ranges (0.05 s - 10 min) in one device
- Light-grey enclosure in RAL 7035
- 2 n/o contacts
- Width of only 17.5 mm (0.689 in)
- 3 LEDs for the indication of operational states

Approvals
UL 508, CAN/CSA C22.2 No.14
EAC
CCC

Marks
CE
RCM

Order data

Type	Rated control supply voltage	Time range	Output	Order code
CT-SDD.22	24-48 V DC, 24-240 V AC	0.05 s - 100 h	2 n/o contacts	1SVR 500 211 R0100

Functions

Operating controls

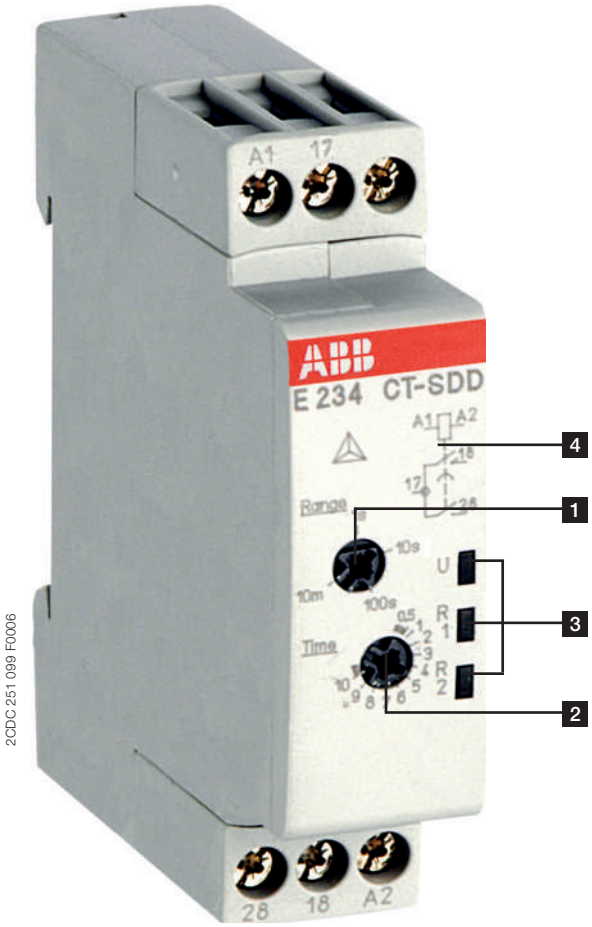

2CDC 251 099 F0006

1 **Rotary switch for the preselection of the time range**

2 **Potentiometer with direct reading scale for the fine adjustment of the time delay**

3 **Indication of operational states**

U: green LED

control supply voltage applied

timing

R1: yellow LED

output relay 1 energized

R2: yellow LED

output relay 2 energized

4 **Circuit diagram**

Application

With their structural form and their width of only 17.5 mm, the CT-D range timers are ideally suited for installation in distribution panels.

Operating mode

The CT-SDD.22 has 2 n/o contacts and offers 4 time ranges, from 0.05 s to 10 min, for the adjustment of the starting time. The time delay range is rotary switch selectable on the front of the unit. The fine adjustment of the time delay is made via an internal potentiometer, with a direct reading scale, on the front of the unit.

Function descriptions / diagrams

⚠ Star-delta change-over

This function requires continuous control supply voltage for timing.
Applying control supply voltage to terminals A1-A2, energizes the star contactor connected to terminals 17-18 and begins the set starting time t_1. The green LED flashes during timing. When the starting time is complete, the first output contact de-energizes the star contactor.

Now, the transition time t_2 starts. When the transition time is complete, the second output contact energizes the delta contactor connected to terminals 17-28. The delta contactor remains energized as long as control supply voltage is applied to the unit.

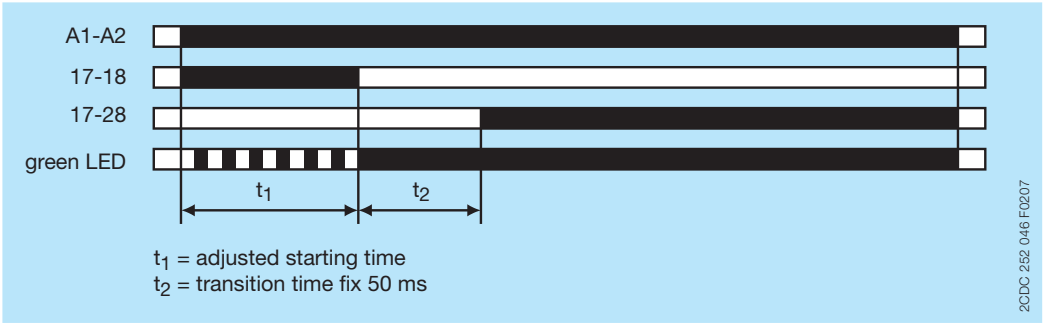

Examples of application

Star-delta change-over

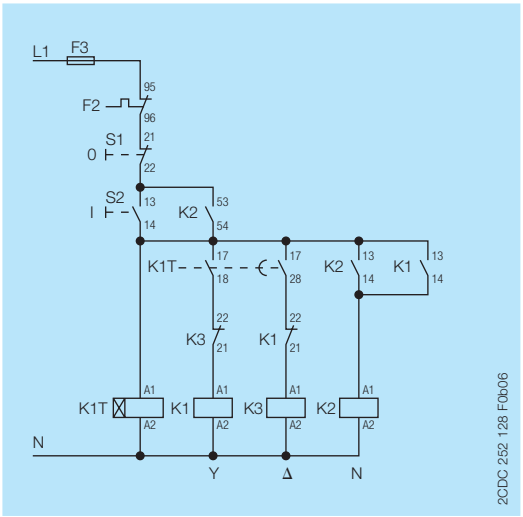

Control circuit diagram

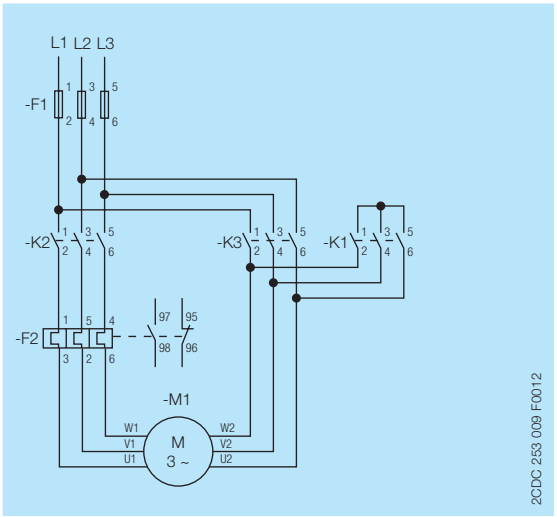

Power circuit diagram

Electrical connection

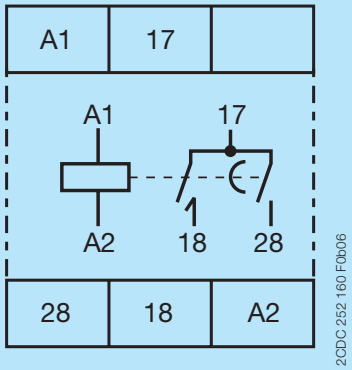

Connection diagram

A1-A2	Rated control supply voltage U_s 24-48 V DC or 24-240 V AC
17-18	1st n/o contact
17-28	2nd n/o contact

Technical data

Data at T_a = 25 °C and rated values, unless otherwise indicated

Input circuits

Supply circuit		**A1-A2**
Rated control supply voltage U_s		24-240 V AC, 24-48 V DC
Rated control supply voltage U_s tolerance		-15...+10 %
Typical current / power consumption	24 V DC	17 mA / 0.4 W
	115 V AC	51 mA / 1.4 VA
	230 V AC	65 mA / 2.7 VA
Rated frequency		DC; 50/60 Hz
Frequency range AC		47-63 Hz
Power failure buffering time		min. 20 ms
Release voltage		> 10 % of the min. rated control supply voltage U_s

Timing circuit		
Kind of timer	Single-function timer	Star-delta change-over
Time ranges		0.05-1 s, 0.5-10 s, 5-100 s, 0.5-10 min
Recovery time		< 50 ms
Repeat accuracy (constant parameters)		Δt < ± 0.5 %
Accuracy within the rated control supply voltage tolerance		Δt < 0.005 % / V
Accuracy within the temperature range		Δt < 0.06 % / °C
Setting accuracy of time delay		± 10 % of full-scale value
Star-delta transition time		fixed, 50 ms
Star-delta transition time tolerance		± 3 ms

User interface

Indication of operational states		
Control supply voltage / timing	U: green LED	⎍⎍⎍: control supply voltage applied ⎍⎍⎍: timing
Relay status	R1: yellow LED	⎍⎍⎍: output relay 1 energized
Relay status	R2: yellow LED	⎍⎍⎍: output relay 2 energized

Output circuit

Kind of output	17-18	Relay, 1st n/o contact
	17-28	Relay, 2nd n/o contact
Contact material		Cd-free
Rated operational voltage U_e		250 V
Minimum switching voltage / Minimum switching current		12 V / 100 mA
Maximum switching voltage / Minimum switching current		see load limit curve / see load limit curve
Rated operational current I_e	AC-12 (resistive) at 230 V	5 A
	AC-15 (inductive) at 230 V	3 A
	DC-12 (resistive) at 24 V	5 A
	DC-13 (inductive) at 24 V	2 A
AC rating (UL 508)	utilization category (Control Circuit Rating Code)	B 300
	max. rated operational voltage	300 V AC
	maximum continuous thermal current at B 300	5 A
	max. making/breaking apparent power at B 300	3600 VA / 360 VA
Mechanical lifetime		30 x 10^6 switching cycles
Electrical lifetime	AC-12, 230 V, 4 A	0.1 x 10^6 switching cycles
Maximum fuse rating to achieve short-circuit protection	n/c contact	6 A fast-acting
	n/o contact	10 A fast-acting

General data

MTBF		on request
Duty time		100 %
Dimensions (W x H x D)	product dimensions	17.5 x 70 x 58 mm (0.69 x 2.76 x 2.28 in)
	packaging dimensions	89 x 65 x 20 mm (3.50 x 2.56 x 0.79 in)
Weight		0.065 kg (0.143 lb)
Mounting		DIN rail (IEC/EN 60715), snap-on mounting without any tool
Mounting position		any
Minimum distance to other units, normal operation mode	horizontal	not necessary
	vertical	not necessary
Degree of protection	housing	IP50
	terminals	IP20

Electrical connection

Connecting capacity	fine-strand with wire end ferrule	2 x 0.5-1.5 mm² / 1 x 0.5-2.5 mm² (2 x 20-16 AWG / 1 x 20-14 AWG)
	fine-strand without wire end ferrule	2 x 0.5-1.5 mm² / 1 x 0.5-2.5 mm² (2 x 20-16 AWG / 1 x 20-14 AWG)
	rigid	2 x 0.5-1.5 mm² / 1 x 0.5-4 mm² (2 x 20-16 AWG / 1 x 20-12 AWG)
Stripping length		7 mm (0.28 in)
Tightening torque		0.5-0.8 Nm (4.43-7.08 lb.in)

Environmental data

Ambient temperature ranges	operation	-20...+60 °C (-4...+140 °F)
	storage	-40...+85 °C (-40...+185 °F)
Climatic class (IEC/EN 60068-2-30)		3k3
Relative humidity range		25 % to 85 %
Vibration, sinusoidal (IEC/EN 60068-2-6)		20 m/s², 10 cycles, 10...150...10 Hz
Shock, half-sine (IEC/EN 60068-2-27)		150 m/s², 11 ms

Isolation data

Rated insulation voltage U_i	input circuit / output circuit	300 V
	output circuit 1 / output circuit 2	300 V
Rated impulse withstand voltage U_{imp}	between all isolated circuits	4 kV; 1.2/50 µs
Power-frequency withstand voltage (test voltage)	between all isolated circuits	2.5 kV, 50 Hz, 60 s
Basic insulation (IEC/EN 61140)	input circuit / output circuit	300 V
Protective separation (IEC/EN 61140, EN 50178)	input circuit / output circuit	250 V
Pollution degree		3
Overvoltage category		III

Standards / Directives

Standards	IEC/EN 61812-1
Low Voltage Directive	2014/35/EU
EMC directive	2014/30/EU
RoHS Directive	2011/65/EC

Electromagnetic compatibility

Interference immunity to		IEC/EN 61000-6-2
electrostatic discharge	IEC/EN 61000-4-2	Level 3 (6 kV / 8 kV)
radiated, radio-frequency, electromagnetic field	IEC/EN 61000-4-3	Level 3 (10 V/m)
electrical fast transient / burst	IEC/EN 61000-4-4	Level 3 (2 kV / 5 kHz)
surge	IEC/EN 61000-4-5	Level 3 (2 kV L-L)
conducted disturbances, induced by radio-frequency fields	IEC/EN 61000-4-6	Level 3 (10 V)
Interference emission		IEC/EN 61000-6-3
high-frequency radiated	IEC/CISPR 22, EN 55022	Class B
high-frequency conducted	IEC/CISPR 22, EN 55022	Class B

Technical diagrams

Load limit curves

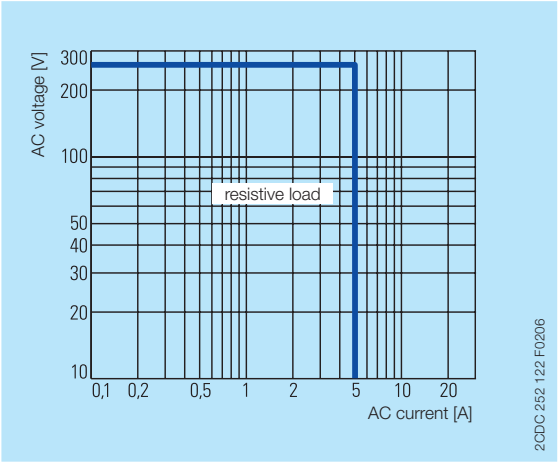

AC load (resistive)

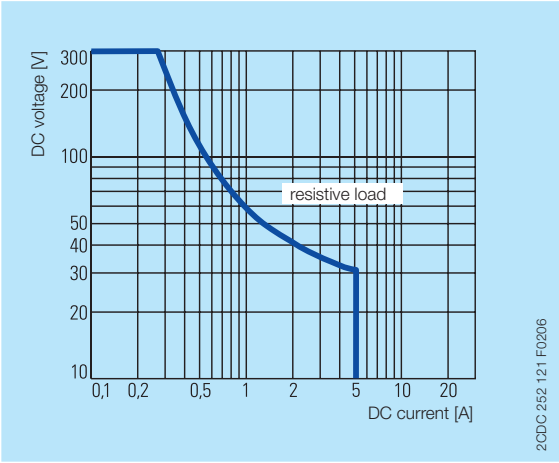

DC load (resistive)

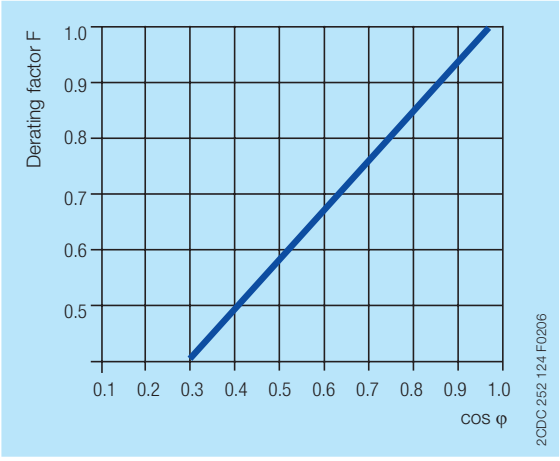

Derating factor F for inductive AC load

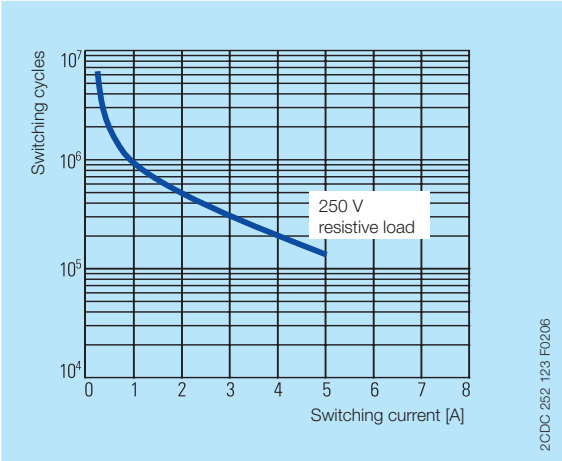

Contact lifetime

Dimensions

in **mm** and *inches*

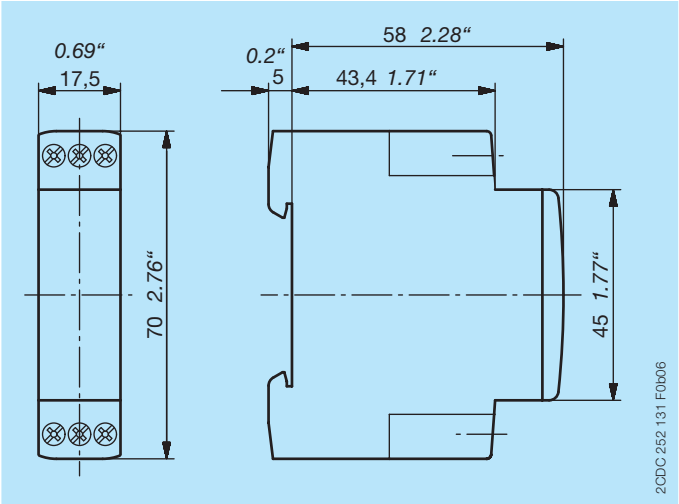

Further documentation

Document title	Document type	Document number
Electronic products and relays	Technical catalogue	2CDC 110 004 C02xx
CT-D range	Instruction manual	1SVC 500 010 M1000

You can find the documentation on the internet at www.abb.com/lowvoltage
-> Automation, control and protection -> Electronic relays and controls -> Electronic timers.

CAD system files

You can find the CAD files for CAD systems at http://abb-control-products.partcommunity.com
-> Low Voltage Products & Systems -> Control Products -> Electronic Relays and Controls.

Contact us

ABB STOTZ-KONTAKT GmbH
P. O. Box 10 16 80
69006 Heidelberg, Germany
Phone: +49 (0) 6221 7 01-0
Fax: +49 (0) 6221 7 01-13 25
E-mail: info.desto@de.abb.com

You can find the address of your
local sales organisation on the
ABB home page
http://www.abb.com/contacts
-> Low Voltage Products and Systems

Document number 2CDC 111 156 D0201 (08.2016)

Note:
We reserve the right to make technical changes or modify the contents of this document without prior notice. With regard to purchase orders, the agreed particulars shall prevail. ABB AG does not accept any responsibility whatsoever for potential errors or possible lack of information in this document.

We reserve all rights in this document and in the subject matter and illustrations contained therein. Any reproduction, disclosure to third parties or utilization of its contents – in whole or in parts – is forbidden without prior written consent of ABB AG.

Copyright© 2016 ABB
All rights reserved