MURR ELEKTRONIK
stay connected

## IMPACT67 Pro PN DIO8 IOL8 M12L 4P

PROFINET, compact module, plastic

Digital inputs/outputs
Ethernet 10/100 Mbit/s; M12, D-coded
IO-Link Master V1.1
M12 Power, 4-pole, L-coded
M12, 5-pole, A-coded
Housing fully potted.
Connection cables are in the online shop under "Connection Technology".
mounting compatible with I/O modules of the MVK series

**Link to Product**

### Illustration



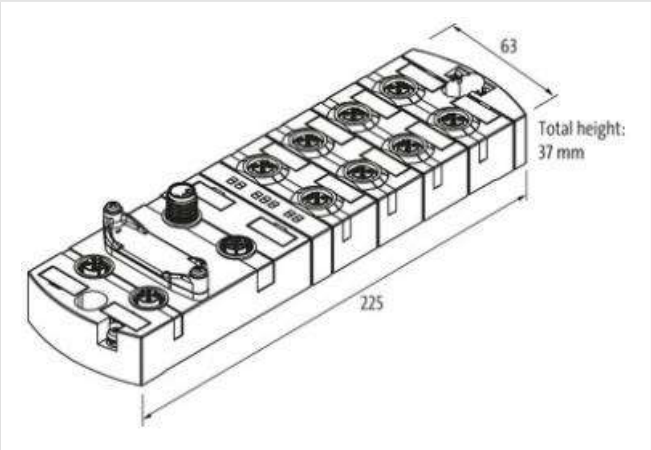


Product may differ from Image

### Commercial data

| | |
|---|---|
| ECLASS-6.0 | 27242604 |
| ECLASS-6.1 | 27242604 |
| ECLASS-7.0 | 27242604 |
| ECLASS-8.0 | 27242604 |
| ECLASS-9.0 | 27242604 |
| ECLASS-10.1 | 27242604 |
| ECLASS-11.1 | 27242604 |
| ECLASS-12.0 | 27242604 |
| ETIM-5.0 | EC001597 |
| customs tariff number | 85389099 |
| GTIN | 4065909022832 |
| Packaging unit | 1 |

### Electrical data | Supply

| | |
|---|---|
| Norm operating voltage | EN 61131-2 |
| Operating voltage US DC | 24 V |
| Operating voltage UA DC | 24 V |
| Total current UA max. | 16 A |

The information in this Product-PDF has been compiled with the utmost care.
Liability for the correctness completeness and topicality of the information is restricted to gross negligence. Version: 2024-02-02

MURR ELEKTRONIK
stay connected

| | |
|---|---|
| Total current US max. | 16 A |
| **Electrical data \| Input** | |
| Overload resistant | yes |
| Short-circuit protected | yes |
| Type input | PNP, for 3-wire sensors or mechanical switches, IO-Link Devices |
| Sensor current US per input max. | 2 A |
| Current carrying capacity max. | 10 A |
| **Electrical data \| Output** | |
| Actuator current UA per output max. | 2 A |
| Overload resistant | yes |
| Short-circuit protected | yes |
| Output current per pin max. | 2 A |
| Max. current output per port | 4 A |
| Total current output max. | 10 A |
| **Industrial communication** | |
| Supported protocol | PROFINET |
| Web interface | yes |
| **Industrial communication \| Profinet** | |
| Number of active connections (IO controller) max. | 2 |
| IRT (network communication) | yes |
| PROFINET Netload Class | III |
| PROFINET addressing | DCP |
| PROFINET conformance class | C |
| PROFINET specification | V2.3 |
| Shared device/input | yes |
| **Industrial communication \| IO-Link** | |
| Automatic baudrate detection | yes |
| IO-Link process data length output | 32 Bytes |
| IO-Link process data length input | 32 Bytes |
| IO-Link type | 8× Master |
| IO-Link transmission rate | COM1, COM2, COM3 |
| Port Class | A, B |
| **Industrial communication \| IIoT functions** | |
| Number of sessions / clients OPC UA max. | 5 |
| JSON integration | REST-API, MQTT |
| OPC UA transport | UA TCP, UA Secure Conversation, UA Binary Encoding |
| Voltage monitoring | yes |
| Current Monitoring | yes |
| Publishing interval OPC UA min. | 100 ms |
| **Diagnostics** | |
| Actuator warning | per channel via LED and BUS |
| Diagnostic via BUS | per module and channel |
| Diagnostic via LED | per module and channel |
| IO-Link events | No voltage, Undervoltage supply |
| LED display | Ethernet connection/data traffic |
| Cable break | per port |
| Temperature control | yes |
| **Device protection \| Electrical** | |
| Degree of protection (EN IEC 60529) | IP67 |
| **Mechanical data \| Mounting data** | |

The information in this Product-PDF has been compiled with the utmost care.
Liability for the correctness completeness and topicality of the information is restricted to gross negligence. Version: 2024-02-02

| | |
|---|---|
| Suitable for mounting type | 2-hole screw mounting |
| Height | 37 mm |
| Width | 63 mm |
| Depth | 225 mm |
| **Environmental characteristics \| Climatic** | |
| Operating temperature min. | -25 °C |
| Operating temperature max. | 70 °C |
| Storage temperature min. | -40 °C |
| Storage temperature max. | 80 °C |
| **Connection type 4** | |
| Connection type 1 | X0-X7 |
| Connection type 2 | XD1 |
| Connection type 3 | XD2 |
| Connection type 4 | XF1, XF2 |
| Family construction form | M12 |
| Gender | female |
| Color contact carrier | gray |
| Coding | A |
| No. of poles | 5 |
| PIN 1 | 24 V DC |
| PIN 2 | DI / DO |
| PIN 3 | 0 V |
| PIN 4 | DI / DO / IO-Link |
| PIN 5 | 0 V |
| Family construction form | M12 |
| Gender | male |
| Color contact carrier | black |
| Coding | L |
| No. of poles | 5 |
| PIN 1 | 24 V DC (US) |
| PIN 2 | 0 V |
| PIN 3 | 0 V |
| PIN 4 | 24 V DC (UA) |
| PIN 5 | n.c. |
| Family construction form | M12 |
| Gender | female |
| Color contact carrier | black |
| Coding | L |
| No. of poles | 4 |
| PIN 1 | 24 V DC (US) |
| PIN 2 | 0 V |
| PIN 3 | 0 V |
| PIN 4 | 24 V DC (UA) |
| Mounting method | inserted, screwed |
| Tightening torque | 0,6 Nm |
| Family construction form | M12 |
| Gender | female |
| Color contact carrier | black |
| Coding | D |
| No. of poles | 4 |
| PIN 1 | TD + |
| PIN 2 | RD + |
| PIN 3 | TD - |

The information in this Product-PDF has been compiled with the utmost care.
Liability for the correctness completeness and topicality of the information is restricted to gross negligence. Version: 2024-02-02

| | |
|---|---|
| PIN 4 | RD - |

The information in this Product-PDF has been compiled with the utmost care.
Liability for the correctness completeness and topicality of the information is restricted to gross negligence. Version: 2024-02-02