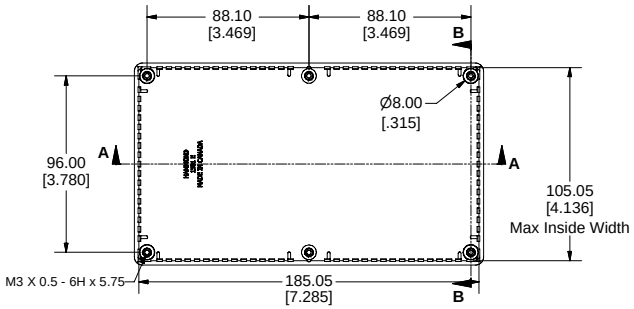

TOP VIEW OF BOX

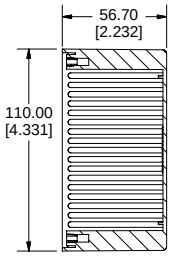

SECTION B-B

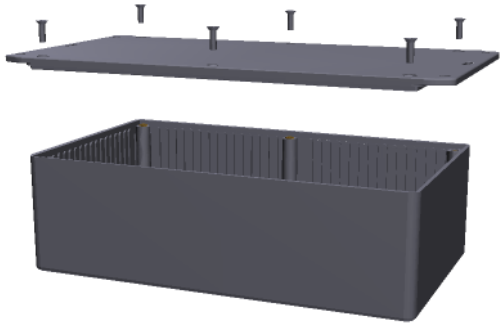

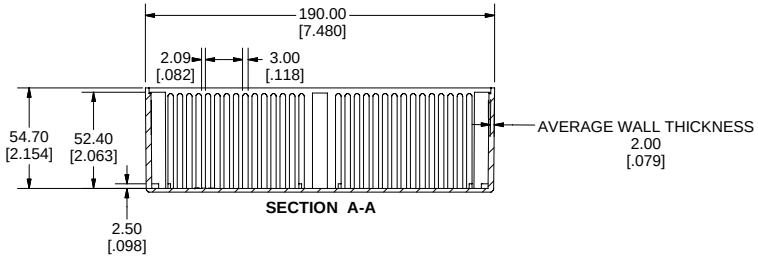

SECTION A-A

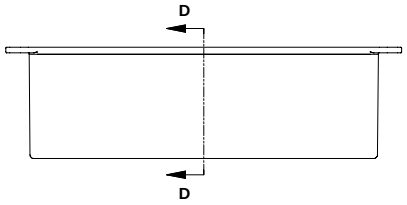

SIDE VIEW OF ASSEMBLY

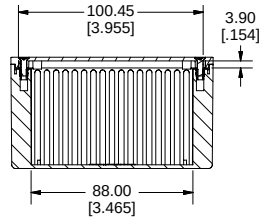

SECTION D-D

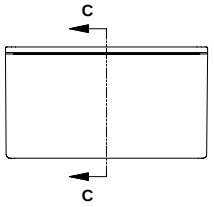

END VIEW OF ENCLOSURE

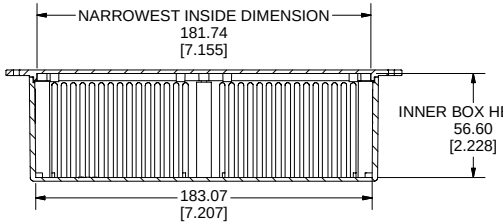

SECTION C-C

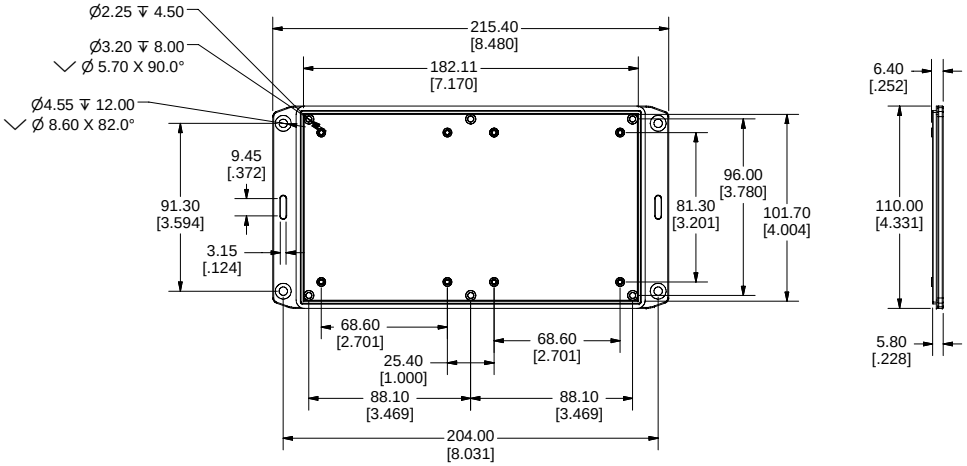

Note:
Enclosures can be Factory Modified (Milling, Drilling, Printing etc.)
Contact Factory mjm@hammondmfg.com for quotes
Solid models of this enclosure available in STEP or IGES Format.

PART NUMBERS		
1591EFL Flanged Lid Enclosures		
Material	**Colour**	**Part Number**
FR ABS UL94 - V0	Black	1591EFLBK
	Grey	1591EFLGY
GP ABS	Black	1591ESFLBK
Accessories		
	Description	**Part Number**
Universal Use	PC Board Card Adapters	See Accessories Section
	Clear Lids - clear, flame retardant polycarbonate - Lid ONLY	1591EC
FR ABS	Replacement Screws, Flat Head Phillips Nickel Plated Pkg of 100	1591MS100 1591MS100BK (Black)
GP ABS	Self Tapping Pkg of 100	1591TS100 1591TS100BK (Black)
Recomended Torque on Fasteners (no lubrication)		
	M3 - 0.5 x 10mm Screws	30-40 cN*m
	#4 x 0.5 Screws	30-40 cN*m

HAMMOND MANUFACTURING™

1591EFL

www.hammondmfg.com