# O6P705

## Retro-reflective sensor

O6PLFNKG/AS/4P

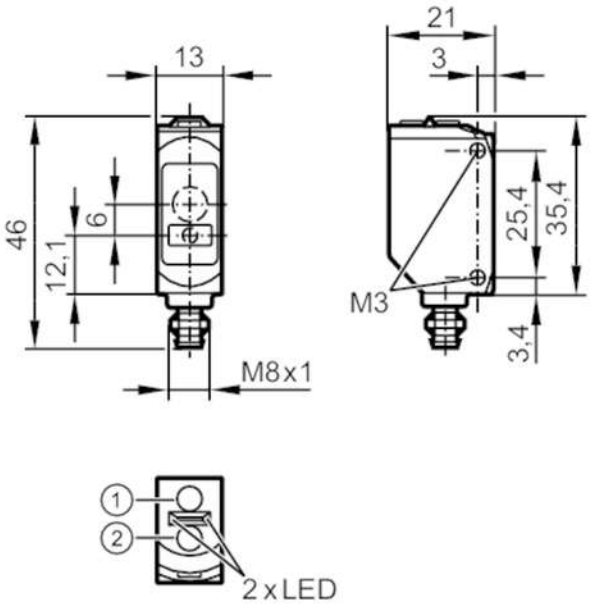


1 programming buttons
receiver in upper lens , transmitter in lower lens

| | | |
|---|---|---|
| **Product characteristics** | | |
| Type of light | | red light |
| Laser protection class | | 1 |
| Housing | | rectangular |
| **Application** | | |
| Function principle | | Retro-reflective sensor |
| **Electrical data** | | |
| Operating voltage | [V] | 10...30 DC |
| Current consumption | [mA] | 15;  (24 V) |
| Protection class | | III |
| Reverse polarity protection | | yes |
| Type of light | | red light |
| Wave length | [nm] | 650 |
| **Outputs** | | |
| Electrical design | | NPN |
| Output function | | light-on/dark-on mode;  (selectable) |
| Max. voltage drop switching output DC | [V] | 2.5 |
| Permanent current rating of switching output DC | [mA] | 100 |
| Switching frequency DC | [Hz] | 1000 |
| Type of short-circuit protection | | pulsed |

# O6P705

## Retro-reflective sensor

O6PLFNKG/AS/4P

| | | | |
|---|---|---|---|
| **Detection zone** | | | |
| Range | [m] | 0.075...8; (Prismatic reflector 50 x 50 mm E20722) | |
| Max. light spot diameter | [mm] | 17 | |
| Light spot dimensions refer to | | at maximum range | |
| **Interfaces** | | | |
| Communication interface | | IO-Link | |
| Transmission type | | COM2 (38,4 kBaud) | |
| IO-Link revision | | 1.1 | |
| SDCI standard | | IEC 61131-9 | |
| Profiles | | Smart Sensor: Device Identification; Device Diagnosis; Teach Channel; Switching Channel | |
| SIO mode | | yes | |
| Required master port type | | A | |
| Min. process cycle time | [ms] | 2.5 | |
| IO-Link process data (cyclical) | | **function** | **bit length** |
| | | process value | 8 |
| | | device status | 4 |
| | | binary switching information | 1 |
| IO-Link functions (acyclical) | | application specific tag; operating hours counter; switching cycles counter | |
| Supported DeviceIDs | | **Type of operation** | **DeviceID** |
| | | default | 525 |
| **Operating conditions** | | | |
| Ambient temperature | [°C] | -10...60 | |
| Protection | | IP 65; IP 67 | |
| **Tests / approvals** | | | |
| EMC | | EN 60947-5-2 | |
| Laser protection class | | 1 | |
| Notes on laser protection | | Caution: | laser light |
| | | laser class: | 1 |
| | | | EN / IEC60825-1:2007 |
| | | | EN / IEC60825-1:2014 |
| | | | Complies with 21 CFR 1040 except for deviations pursuant to Laser Notice No. 50, dated June 2007. |
| MTTF | [years] | 636 | |
| **Mechanical data** | | | |
| Weight | [g] | 19.3 | |
| Housing | | rectangular | |
| Dimensions | [mm] | 46 x 13 x 21 | |
| Materials | | housing: ABS; PPSU; Sealing: EPDM | |
| Lens material | | PMMA | |
| Lens alignment | | side lens | |
| Tightening torque | [Nm] | 0.5; (screws) | |
| **Displays / operating elements** | | | |
| Display | | switching status | 1 x LED, yellow |
| | | operation | 1 x LED, green |

# O6P705

## Retro-reflective sensor

O6PLFNKG/AS/4P

## Remarks

| | |
|---|---|
| Remarks | operating voltage "supply class 2" according to cULus |
| Pack quantity | 1 pcs. |

## Electrical connection - plug

Connector: 1 x M8; coding: A




## Connection

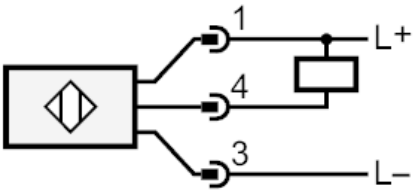


| | |
|---|---|
| 4 | OUT / IO-Link |

## Diagrams and graphs

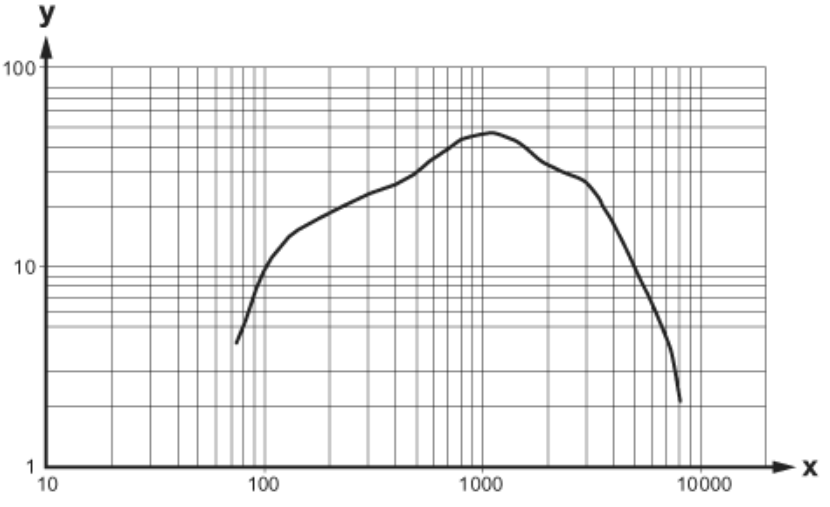


x: Abstand [mm]

y: Funktionsreservefaktor