EY1006

Corner mirror for safety light grids

DEFLECTION MIRROR 1060 LENGTH

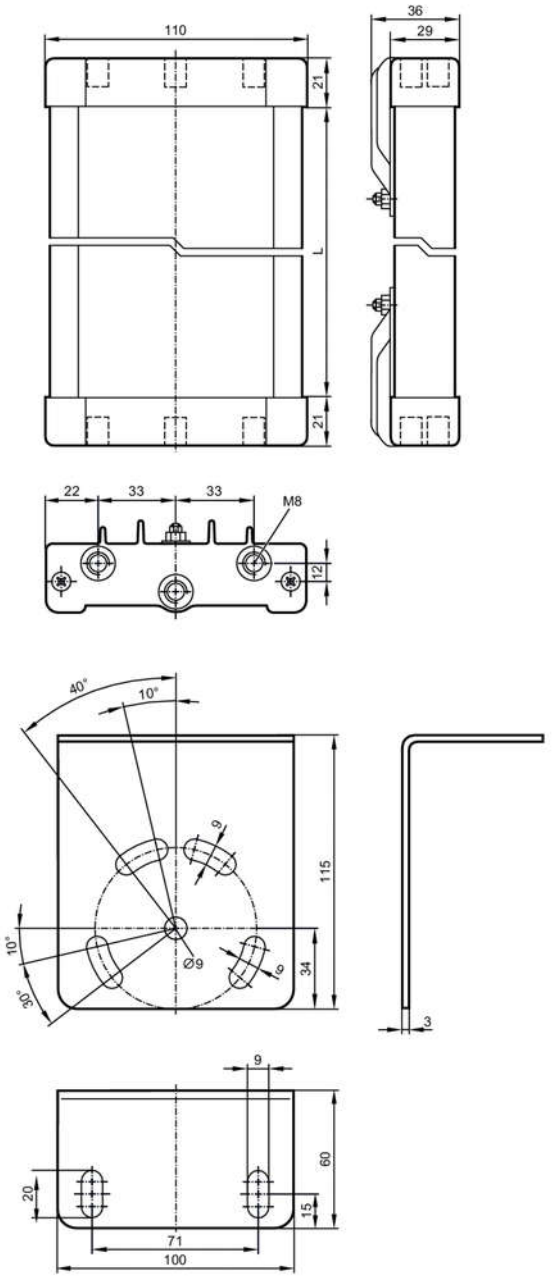

Application		
Design		for safety light grids
Operating conditions		
Ambient temperature	[°C]	-10...55
Mechanical data		
Weight	[g]	5330
Dimensions	[mm]	1102 x 110 x 36
Materials		aluminium epoxy-powder coated; plastics; Accessories: steel galvanised
Length	[mm]	1060

EY1006

Corner mirror for safety light grids

DEFLECTION MIRROR 1060 LENGTH

Accessories	
Items supplied	screws: 4 x M8
	hexagon nuts: 4 x M8
	washers: 4

Remarks	
Pack quantity	1 pcs.