TR 610 top3 12-24V

Item no.: 6104130

Time and light control
Digital time switches

Description

- Digital time switch with weekly program
- 1 channel
- Programming by app possible
- Safe transfer via optional Bluetooth Low Energy OBELISK top3
- Maximum manipulation security, time switch programs can only be transferred from the app to the time switch when the Bluetooth OBELISK top3 is plugged into the time switch
- 100 % compatible with top2
- DuoFix spring terminals
- For 2 conductors each
- Wire or strand (with or without wire end sleeve)
- Wire diameter: 0.5 - 2.5 mm²
- Button for releasing plug-in connection
- Text-oriented user guidance in display
- Preset date and time
- fully operable without mains connection
- 56 memory locations
- Interface for OBELISK top2 memory card (PC programming)
- 2. insertable switching program
- Copying programs
- Storing programs
- 10 year power reserve (lithium battery)
- ON-OFF switching times
- Switching preselection
- Permanent switching ON/OFF
- Integrated operating hour counter
- Reset option
- Service function for monitoring maintenance intervals
- Holiday program
- Display back light (can be turned off)
- Permanent switching ON/OFF
- PIN coding
- Automatic summer/winter time changeover
- can be deactivated
- Date rule options are already stored for Europe, the USA and other countries
- own date rule options or changeover around set dates are available



TR 610 top3 12-24V

Item no.: 6104130

Technical data

	TR 610 top3 12-24V
Operating voltage	12 - 24 V UC
Frequency	60 Hz
Width	2 modules
Installation type	DIN rail
Type of contact	Changeover contact
Switching output	Phase-independent
Opening width	< 3 mm
Program	Weekly program
Program functions	ON-OFF
Number of channels	1
Number of memory locations	56
Power reserve	10 years
Switching capacity at 250 V AC, cos φ = 1	16 A
Switching capacity at 250 V AC, cos φ = 0,6	2 A
Incandescent/halogen lamp load	1400 W

	TR 610 top3 12-24V
LED lamp < 2 W	6 W
LED lamp 2-8 W	20 W
LED lamp > 8 W	20 W
Switching capacity min.	ca. 10 mA
Shortest switching times	1 min
Time accuracy at 25 °C	typical ± 0,25 s/day (quartz)
Time basis	Quartz
Stand-by consumption	~
Type of connection	DuoFix spring terminals
Display	LCD
Keyboards	4 touch buttons
Housing and insulation material	High-temperature resistant, self-extinguishing thermoplastic
Type of protection	IP 20
Protection class	II according to EN 60 730-1
Ambient temperature	-30°C ... 55°C

Connection example

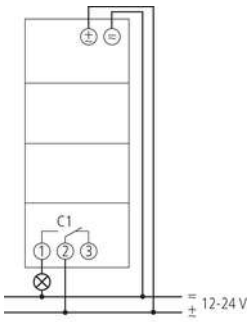

TR 610 top3 12-24V

Item no.: 6104130

Scale drawings

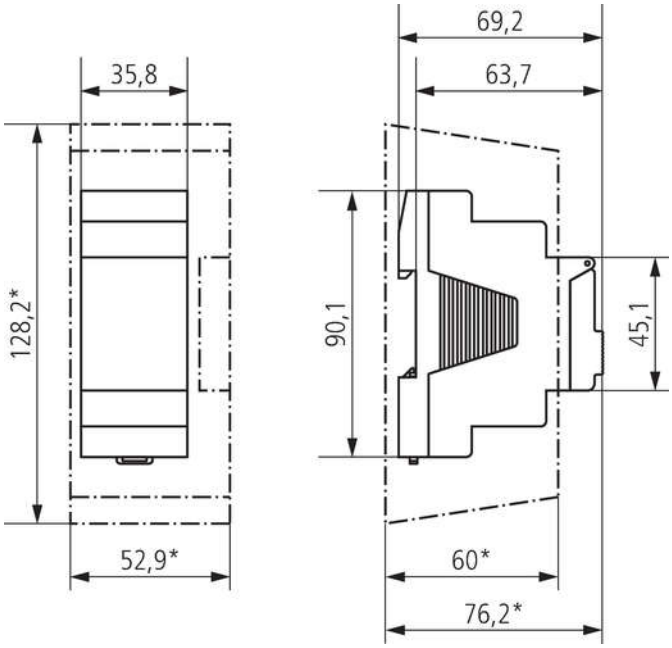

Accessories

Wall mounting kit 35 mm
Item no.: 9070064



PC set OBELISK top2/3
Item no.: 9070409



Memory card OBELISK top2
Item no.: 9070404



Front panel kit
Item no.: 9070001



Bluetooth OBELISK top3
Item no.: 9070130

