French Ferrule Fuses

Modular fuse holders CMS

New

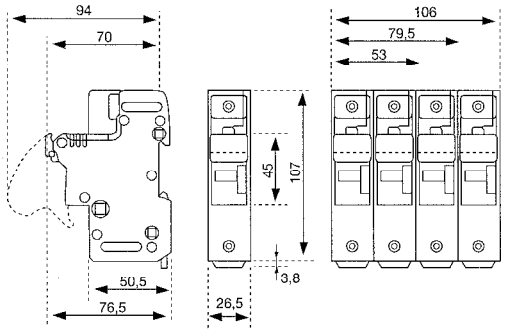

- Indicator for fuse melts and/or striker (120/690V)
- Clip for rail mounting in two positions
- Cable size max. 35 mm ²
- Provision for locking
- IP 20

CMS 14: Fuse 14x51
In max: 50A; Vn max: 690V

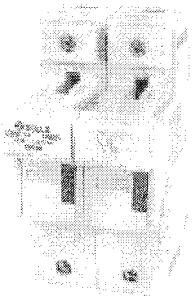

J211056

Poles	CATALOG NUMBER				REFERENCE NUMBER				N° Mod. (17.5 mm)	Packing
	Standard	+ Indicator	+ Microswitch	Micro + ind.	Standard	+ Indicator	+ Microswitch	Micro + ind.		
N	29000				N222468				1,5	6
1	29002	29004	29020	29120	F222990	M200778	K214645	N201837	1,5	6
1 + N	29010	29011			E201323	M201836			3	3
2	29012	29013	29021	29121	J211056	C211579	R215157	K211057	3	3
3	29014	29015	29024	29124	J212091	Z212611	T215665	D211500	4,5	2
3*			29025 *	29125 *			Y216681 *	K212092 *	6	1
3 + N	29016	29017	29026	29126	L213128	D213627	L217199	A212612	6	1
4	29019				G214136				6	1

* 2 microswitches



P217708

Unipolar fuse holder for accessories (**)

Function	CATALOG NUMBER	REFERENCE NUMBER	N° Mod. (17.5 mm)	Packing
Blown fuse, fuse presence, prebreaking	29030	P217708	1,5	6
Blown fuse only	29031	L223524	1,5	6

(**) Enables installation of accessory microswitch and/or indicator

Accessories (***)

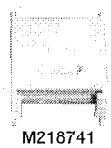

M218741

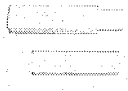

F213629

Description	CATALOG NUMBER	REFERENCE NUMBER	N° Mod. (17.5 mm)	Packing
Micro Kit 1P	29051	M218741	1,5	1
Micro Block 3P	29052	C219261	4,5	1
Block 2 Micro 3P	29053	D219791	4,5	1
Micro assembly pins	29265	J214138		10
Micro enlargement pin	29264	F213629		10
Fuse holder assembly pins	29050	Z218223		10
Indicator	29054	-		1
Lock	29057	M223525		1

(***) See technical features for mounting information

Standards: IEC 260 2 1 / 047 3

Technical features - modular fuse holders

Fuse-link table I max. / Vn





	Type	Fuse	In max.					Torque Maxi N.m.
			250	400	500	600	690	
CC	CC. 8	8 x 31		25A				2
	CC. 10	10 x 38		32A	25A			2
	CC. 14	14 x 51		50A	32A		25A	3,5
	CC. 22	22 x 58		125A	100A		80A	4
CCR	CCR. 8	8 x 31		25A				2
	CCR. 10	10 x 38		32A	25A			
MSC	MSC. 8	8 x 31		25A				2
	MSC. 10	10 x 38		32A	25A			
MSD	MSD (8x23)	8 x 23	10A					2
	MSD (8x31)	8 x 31		20A				
	MSD (10x25)	10 x 25	16A					
	MSD (10x31)	10 x 31		25A				
	MSD (10x38)	10 x 38		32A				
CMS	CMS. 14	14 x 51		50A	32A		25A	3,5
	CMS. 22	22 x 58		125A	100A		80A	4,5
MSM	MSM	5 x 20	16A					2

Application coefficient of multipolar fuse-links

N. mod (17,5 mm)	Fuse-link I max.
1 - 2 - 3	In
4 - 5 - 6	0,8 x In
7 - 8 - 9	0,7 x In
> 10	0,6 x In

Correction of available current based on temperature

Temperature	Available x In
20°C	1
30°C	0,95
40°C	0,9
50°C	0,8

Technical features - CMS

Table of electrical characteristics

	Rating UN(V)	Ulmp (kV)	Fuse current rating IN(A)	Maximim fuse operating current (A)				Recommended copper wire size (mm2)	Torque Maxi N.m.
				gG	aM	gRC	UR		
CMS 14	690	8	0,25 0,5 1 2 4 6 8 10 12 16 20 25 32 40 50	0,25 40 50	0,25 40 50	 10 12 16 20 25 32 30 38	 10 12 16 20 20 25 25 35	 2,5 2,5 4 6 6 10	3,5
CMS 22	690	8	1 2 4 6 8 10 12 16 20 25 32 40 50 63 80 100 125	 	1 100 100	 20 25 32 40 50 51 64 74	 20 25 42 40 50 63 60 70	 4 6 10 10 10 10 25 35 35	4

Lock installation
Reference Number M223525

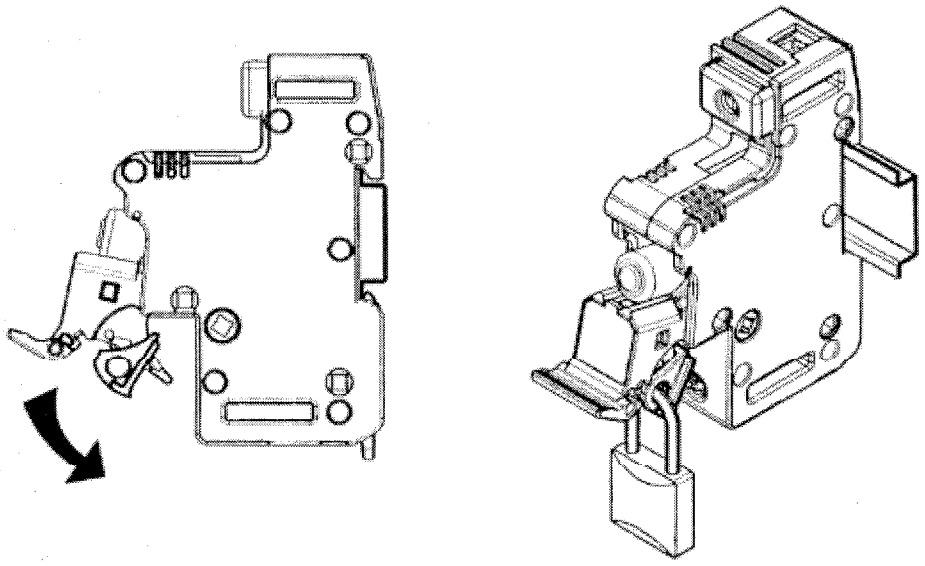

Technical features - CMS

Microswitch options

Ref. Number CMS 14 (D219791) • Art. N° CMS 22 (B212613)

2 microswitches

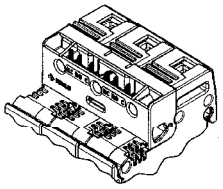

Ref. Number CMS 14 (C219261)
Ref. Number CMS 22 (L21E090)

1 microswitch

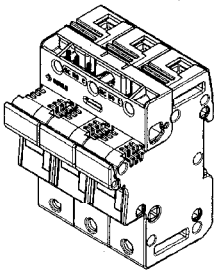

Ref. Number CMS 14 (M218741+F213629)
Ref. Number CMS 22 (M218741+F213629)

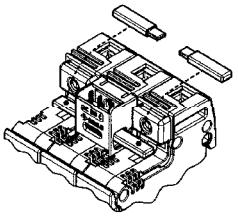

1 microswitch

Ref. Number CMS 14 (M218741)
Ref. Number CMS 22 (E211581)

3 independent microswitches

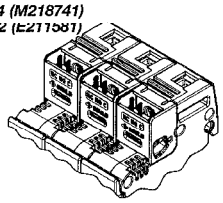

Ref. Number CMS 14 (M218741+J214138)
Ref. Number CMS 22 (E211581+J214138)

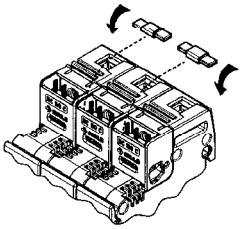

3 mechanically interconnected microswitches

Fuse holder assembly

Ref. Number CMS 14/22 (Z218223)

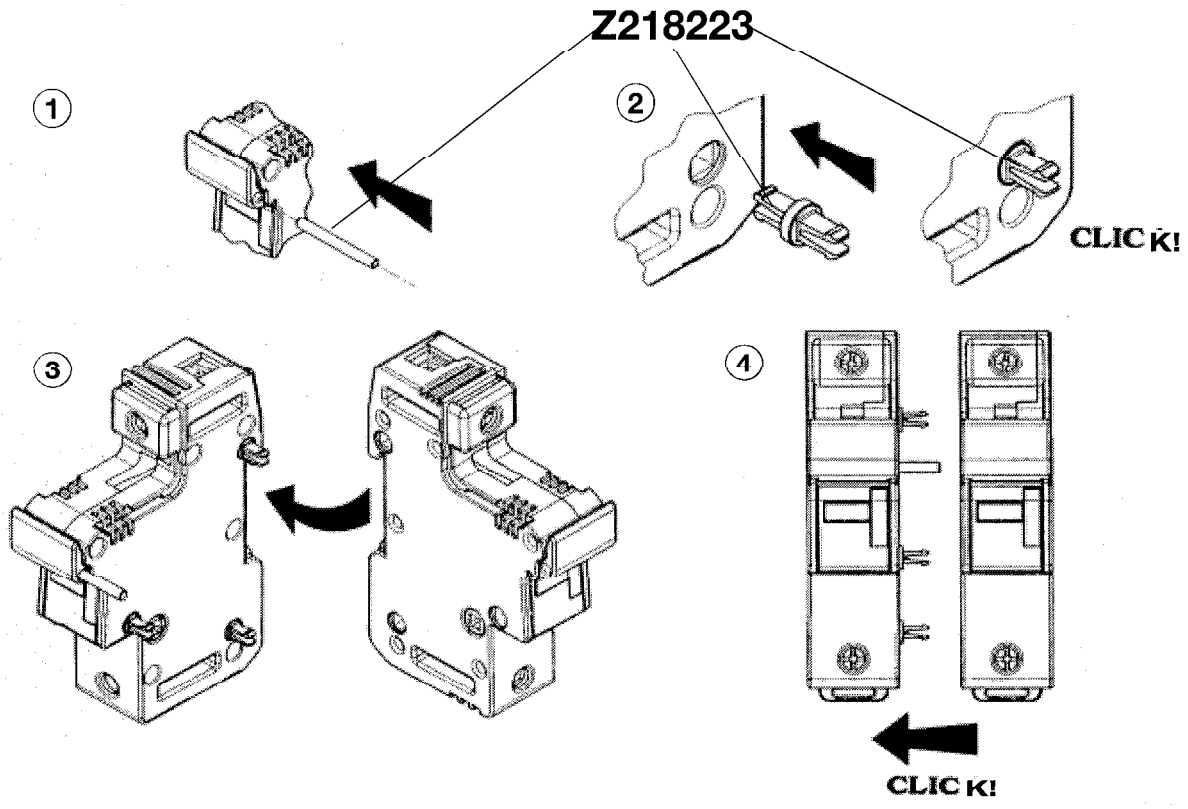

Technical features - CMS

Microswitch mounting instructions (*)

Reference Number CMS 14 (M218741 / C219261 / D219791)
Reference Number CMS 22 (E211581 / L212093 / B212613)

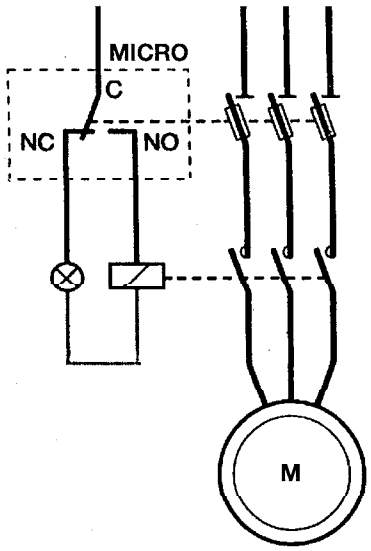

Assembly

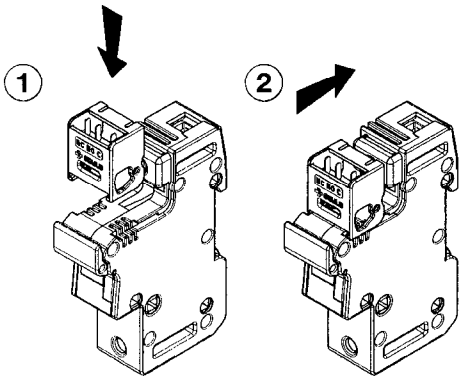

Disassembly

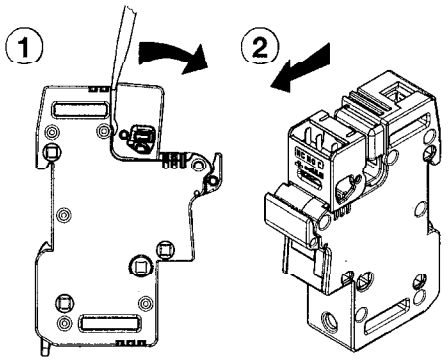

(*)Microswitch functions

Blown fuse: Fuse holder containing fuse with striker sends message when fuse blown

Prebreaking: When fuse holder opens

Presence: Sends message or not depending on fuse presence

Auxilliary microswitch caracteristics

Minimum voltage and current for operation: 10VAC/DC 100mA

Nominal current and interrupting rating(1) at 250V	6A	AC12
	3A	AC13
	0,3A	AC14
	0,1A	DC12/13/14
Nominal current and interrupting rating(1) at 2 and 24 V	6A	DC12/DC13
	5A	AC13
	2A	AC14/DC13
	0,6A	DC14

(1) According IEC947-5 standard

Modular fuse holders MS

MS Modular fuse base

for industrial cylindrical fuse-links

Note:
In 2001, these products will be cross-referenced to MSC10, CMS14 and CMS22 (see previous pages)

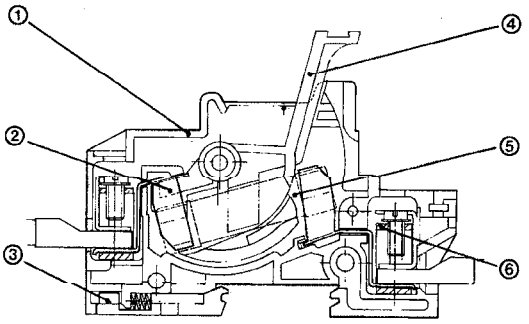

1 Base
2 Contact
3 Slide
4 Handle
5 Fuse-link
6 Bolt

Material:
Handle: Thermal polyester (PU)
Base: Highly temperature resistant polyamide.
Self-extinguishable.
Contacts: Silver-plated.
Protection Index: IP 20
Live parts inaccessible.

MS fuse holder operations
with:
- Fuse indicator (250/690V~)
  Indicator lights up when:
  - Fuse melts
  - No fuse-link
- Reversing microswitch 5A-250V~
  The microswitch operates:
  - When fuse-link absent
  - When fuse base open
  - By trip-indicator action

Type	Fuse base In. (*)	Fuse-link	Fuse-link max.		
			400 V~	500 V~	690 V~
MS. 10	32A	10 x 38	32A	25A	-
MS. 14	50A	14 x 51	50A	40A	25A
MS. 22	125A	22 x 58	125A	100A	80A

(*) In intermitent operation
Do not open under load

Standards:
CEI 269-2-1, 947-3
NFC 63210 - 63001
VDE 0636 - 1
UNE 20129 - 21103

Approvals:
Lloyd's Register of Shipping
Bureau Veritas