Brand of NTN corporation

Technical data

UKF311H

Bearing units



Grey cast housing, radial insert ball bearing with adapter sleeve,seal with slinger

KIT CONTENT

UK311G2H, F311

VISUAL (S)

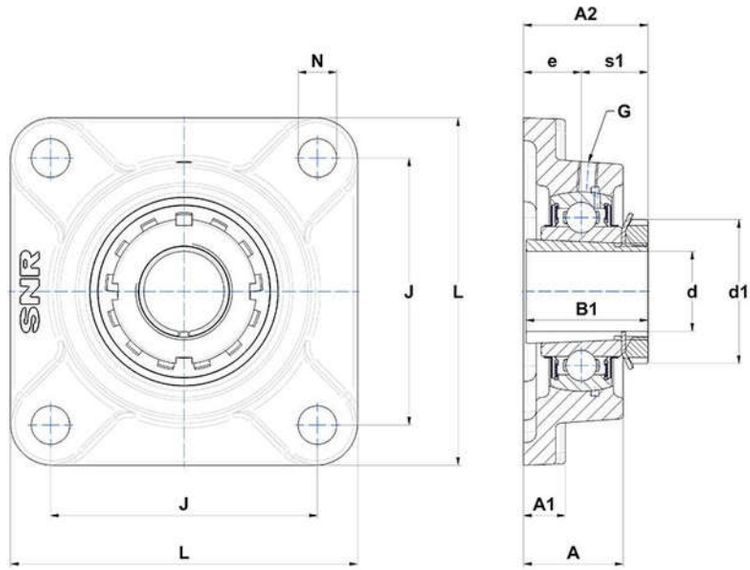

PRODUCT DEFINITION

Brand	SNR
A - Housing height	52 mm
A1 - Housing foot height / flange height	20 mm
A2 - Total height from mounting surface	64 mm
B - Width of Inner Ring	43 mm
B1 - Overall width Inner Ring	59 mm

PRODUCT DEFINITION	
d - Shaft diameter	50 mm
d1 - Outer dia of eccent. Lock. collar / nut of adapter sleeve	75 mm
e - Distance mounting surface to bearing center	30 mm
G - Grease fitting	M6x1
J - Mounting holes distance	140 mm
L - Housing width / diameter	185 mm
N - Mounting hole dimension	23 mm
s1 - Distance nut to middle of bearing raceway	34 mm

PRODUCT PERFORMANCE	
C - Dynamic load rating	71500000 mN
C0 - Static load rating	44800000 mN
Operating temperature min.	253,15 °K
Operating temperature max.	373,15 °K

OTHER FEATURES	
Mass	5,35 kg
Adapter sleeve designation	H2311