MCS ES 18

Metal Switch Medium Stroke, Switching Voltage up to 36 VDC



MCS ES 18

Description
- Vandal-proof momentary switch with a diameter of 18 mm
- Assembly by mounting with nut
- Clip for Pins

Standards
- EN 50102

Characteristics
- Housing and actuator made of high quality stainless steel
- Rugged design, protection against vandalism
- For use in harsh environments, both indoors and outdoors

Weblinks
html-datasheet, General Product Information, CE declaration of conformity, RoHS, CHINA-RoHS, e-Shop, CAD-Drawings, Product News, Detailed request for product

Technical Data

Electrical Data	
Contact Material Silver	
Switching Voltage	min. 3 VDC , max. 36 VDC
Switching Current	max. 2 A
Rated Switching Capacity	72 W
Lifetime	0.2 million actuations
Contact Resistance	< 50 mΩ
Insulation Resistance	> 1'000 MΩ
Duration of Bounce	< 10 ms

Mechanical Data	
Actuating Force	4 N
Actuating Travel	1.8 mm,
Lifetime	1 million actuations
Shock Protection	IK 09 ,
Tightening Torque	1 Nm
Climatical Data	
Operating Temperature	-20 to +55 °C
Storage Temperature	-20 to +55 °C
IP-Protection	IP 65 from front side, ,
Material	
Contact Material	Ag
Housing	Stainless Steel
Actuator unlettered	Stainless Steel

Dimension
MCS ES 18

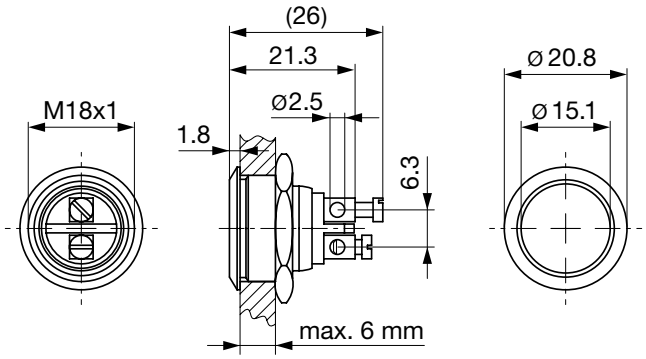

Dimension

MCS ES 18

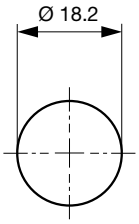

Drilling diagram

Diagrams

MCS ES 18

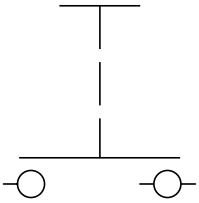

All Variants

Switching Current	Switching Voltage	Contact Material	Shock Protection	Torsion Protection	IP Protection Class Front Side	Config. Code	Order Number
[A]	[VAC/ VDC]						
2 A	36 VDC	Ag	IK 09	no	IP 65	MCS ES 18	1301.9560

Plastic nut with gasket are enclosed in the box.

Most Popular.

Availability for all products can be searched real-time:http://www.schurter.com/en/Stock-Check/Stock-Check-SCHURTER

Packaging unit

40 in cardboard box



- Actuating elements with nut in the packaging
- Sealing rings in a bag (enclosd in the box)

22.08.2014

The specifications, descriptions and illustrations indicated in this document are based on current information. All content is subject to modifications and amendments. Information furnished is believed to be accurate and reliable. However, users should independently evaluate the suitability and test each product selected for their own applications.