ID5023

Inductive sensor

IDE3060-FNKG

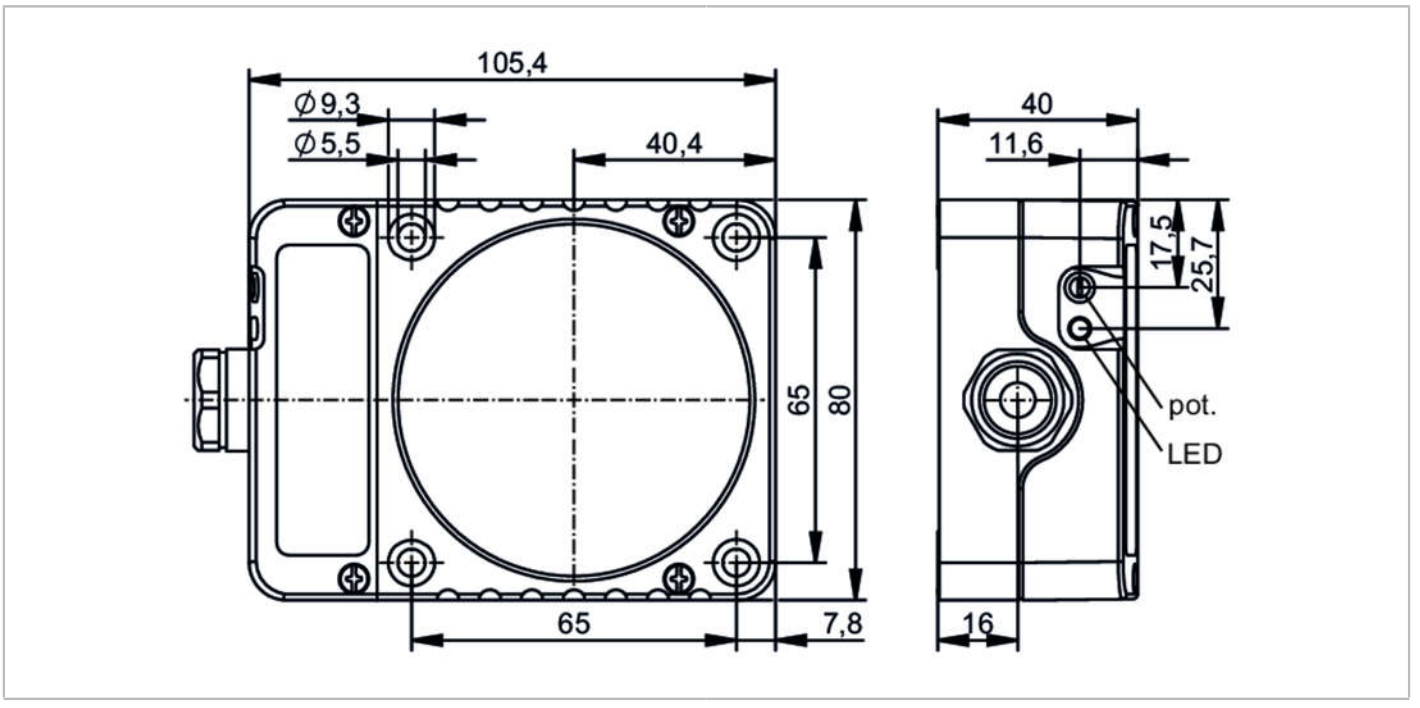

Product characteristics		
Electrical design		NPN
Output function		normally open / normally closed; (selectable)
Sensing range	[mm]	60
Housing		rectangular
Dimensions	[mm]	105 x 80 x 40
Electrical data		
Operating voltage	[V]	10...36 DC
Current consumption	[mA]	15; (24 V)
Protection class		II
Reverse polarity protection		yes
Outputs		
Electrical design		NPN
Output function		normally open / normally closed; (selectable)
Max. voltage drop switching output DC	[V]	2.5
Permanent current rating of switching output DC	[mA]	250
Switching frequency DC	[Hz]	4
Short-circuit protection		yes
Type of short-circuit protection		pulsed
Overload protection		yes
Detection zone		
Sensing range	[mm]	60

ID5023

Inductive sensor

IDE3060-FNKG

Sensing range adjustable		yes	
Factory setting sensing range	[mm]	60	
Real sensing range Sr	[mm]	60 ± 10 %	
Operating distance	[mm]	0...48.6	
Accuracy / deviations			
Correction factor		steel: 1 / stainless steel: 0.7 / brass: 0.4 / aluminium: 0.3 / copper: 0.2	
Hysteresis	[% of Sr]	1...15	
Switch point drift	[% of Sr]	-10...10	
Operating conditions			
Ambient temperature	[°C]	-25...80	
Protection		IP 65	
Tests / approvals			
EMC		EN 60947-5-2	
		EN 55011	class B
MTTF	[years]	963	
Mechanical data			
Weight	[g]	435	
Housing		rectangular	
Mounting		non-flush mountable	
Dimensions	[mm]	105 x 80 x 40	
Materials		PPE modified	
Displays / operating elements			
Display		switching status	1 x LED, yellow
Accessories			
Items supplied		screwdriver: 1	
Remarks			
Pack quantity		1 pcs.	
Electrical connection			

terminals: ...2.5 mm²; Cable sheath: Ø 7...13 mm; Cable gland: M20 X 1.5

Connection

